lenovo

Note:

Before using this information and the product it supports, be sure to read the general information under “Notices” on page 83.

First Edition (April 2014)

© Copyright Lenovo 2014. All rights reserved.

LENOVO products, data, computer software, and services have been developed exclusively at private expense and are sold to governmental entities as commercial items as defined by 48 C.F.R. 2.101 with limited and restricted rights to use, reproduction and disclosure.

LIMITED AND RESTRICTED RIGHTS NOTICE: If products, data, computer software, or services are delivered pursuant a General Services Administration “GSA” contract, use, reproduction, or disclosure is subject to restrictions set forth in Contract No. GS-35F-05925.

© 2014 Lenovo

Contents

About this manual.....iv

Safety information.....1
General safety 2
Electrical safety 3
Safety inspection guide 5
Handling devices that are sensitive to electro-static discharge 6
Grounding requirements 6
Safety notices: multilingual translations..... 7
Laser compliance statement..... 14

Important service information 16
Strategy for replacing FRUs..... 16
Strategy for replacing a hard disk drive .. 17
Important notice for replacing a system board 17
Important information about replacing RoHS compliant FRUs 18

General checkout.....19
What to do first..... 20
Power system checkout 21
Checking the AC adapter..... 21
Checking operational charging 21
Checking the battery pack 22

Related service information.....23
Restoring the factory contents by using Recovery Disc Set..... 23
Passwords..... 24
Power-on password 24
Hard-disk password 24
Supervisor password 24
Power management 25
Screen blank state..... 25
Putting the computer to sleep or shutting it down 25

Lenovo B50-30/B50-30 Touch/B50-45/B50-70 27
Specifications 27
Status indicators 29
Fn key combinations..... 30
Hotkeys..... 30
FRU replacement notices..... 31
Screw notices..... 31
Removing and replacing an FRU..... 32
1010 Battery pack..... 33
1020 Optical drive 34
1030 Bottom slot cover 36
1040 Hard disk drive..... 37
1050 DIMM 39
1060 PCI Express Mini Card for wireless LAN/WAN..... 40
1070 Keyboard..... 41
1080 Keyboard bezel 43
1090 Finger print and power board 45
1100 USB board and ODD board..... 47
1110 Led board..... 48
1120 Docking board (on select models).... 49
1130 System board..... 50
1140 Fan and heat sink assembly 53
1150 Speakers and battery board..... 54
1160 LCD unit and base cover 55
1170 LCD front bezel..... 59
1180 LCD panel..... 60
1190 LCD hinges..... 62
1200 Antenna, LCD cable, and integrated camera 63
Locations 65
Front view..... 65
Right-side view 66
Bottom and left-side view 67
Parts list..... 68
Overall..... 69
LCD FRUs 73
Keyboard..... 75
Miscellaneous parts..... 78
AC adapters..... 79
Screws..... 79
Power cords 80

Notices 83
Trademarks..... 84

About this manual

This manual contains service and reference information for the following Lenovo product:

Lenovo B50-30/B50-30 Touch/B50-45/B50-70

Use this manual to troubleshoot problems.

The manual is divided into the following sections:

- The common sections provide general information, guidelines, and safety information required for servicing computers.
- The product-specific section includes service, reference, and product-specific parts information.

Important:

This manual is intended only for trained servicers who are familiar with Lenovo products. Use this manual to troubleshoot problems effectively.

Before servicing a Lenovo product, make sure to read all the information under “Safety information” on page 1 and “Important service information” on page 16.

Safety information

This chapter presents the following safety information that you need to get familiar with before you service a Lenovo computer:

- “General safety” on page 2
- “Electrical safety” on page 3
- “Safety inspection guide” on page 5
- “Handling devices that are sensitive to electrostatic discharge” on page 6
- “Grounding requirements” on page 6
- “Safety notices: multilingual translations” on page 7
- “Laser compliance statement” on page 14

General safety

Follow the following rules to ensure general safety:

- Observe a good housekeeping in the area where the machines are put during and after the maintenance.
- When lifting any heavy object:
  1. Make sure that you can stand safely without slipping.
  2. Distribute the weight of the object equally between your feet.
  3. Use a slow lifting force. Never move suddenly or twist when you attempt to lift it.
  4. Lift it by standing or pushing up with your leg muscles; this action could avoid the strain from the muscles in your back. Do not attempt to lift any object that weighs more than 16 kg (35 lb) or that you think is too heavy for you.
- Do not perform any action that causes hazards to the customer, or that makes the machine unsafe.
- Before you start the machine, make sure that other service representatives and the customer are not in a hazardous position.
- Please remove covers and other parts in a safe place, away from all personnel, while you are servicing the machine.
- Keep your tool case away from walk areas so that other people will not trip it over.
- Do not wear loose clothing that can be trapped in the moving parts of the machine. Make sure that your sleeves are fastened or rolled up above your elbows. If your hair is long, fasten it.
- Insert the ends of your necktie or scarf inside clothing or fasten it with the nonconductive clip, about 8 centimeters (3 inches) from the end.
- Do not wear jewelry, chains, metal-frame eyeglasses, or metal fasteners for your clothing.

  Attention: Metal objects are good electrical conductors.
- Wear safety glasses when you are hammering, drilling, soldering, cutting wire, attaching springs, using solvents, or working in any other conditions that may be hazardous to your eyes.
- After service, reinstall all safety shields, guards, labels, and ground wires. Replace any safety device that is worn or defective.
- Reinstall all covers correctly before returning the machine to the customer.
- Fan louvers on the machine help to prevent the overheating of internal components. Do not obstruct fan louvers or cover them with labels or stickers.

Electrical safety

Observe the following rules when working on electrical equipments.

Important:
Use only approved tools and test equipments. Some hand tools have handles covered with a soft material that does not insulate you when working with live electrical currents.
Many customers have rubber floor mats near their machines that contain small conductive fibers to decrease electrostatic discharges. Do not use such kind of mat to protect yourself from electrical shock.

- Find the room emergency power-off (EPO) switch, disconnecting switch, or electrical outlet. If an electrical accident occurs, you can then operate the switch or unplug the power cord quickly.
- Do not work alone under hazardous conditions or near the equipment that has hazardous voltages.
- Disconnect all power before:
  - Performing a mechanical inspection
  - Working near power supplies
  - Removing or installing main units
- Before you start to work on the machine, unplug the power cord. If you cannot unplug it, ask the customer to power-off the wall box that supplies power to the machine, and to lock the wall box in the off position.
- If you need to work on a machine that has exposed electrical circuits, observe the following precautions:
  - Ensure that another person, familiar with the power-off controls, is near you.
    Attention: Another person must be there to switch off the power, if necessary.
  - Use only one hand when working with powered-on electrical equipment; keep the other hand in your pocket or behind your back.
    Attention: An electrical shock can occur only when there is a complete circuit. By observing the above rule, you may prevent a current from passing through your body.
  - When using testers, set the controls correctly and use the approved probe leads and accessories for that tester.
  - Stand on suitable rubber mats (obtained locally, if necessary) to insulate you from grounds such as metal floor strips and machine frames.

Observe the special safety precautions when you work with very high voltages; instructions for these precautions are in the safety sections of maintenance information. Be extremely careful when you measure the high voltages.

- Regularly inspect and maintain your electrical hand tools for safe operational condition.
- Do not use worn or broken tools and testers.
- Never assume that power has been disconnected from a circuit. First, check it to make sure that it has been powered off.

- Always look carefully for possible hazards in your work area. Examples of these hazards are moist floors, nongrounded power extension cables, power surges, and missing safety grounds.
- Do not touch live electrical circuits with the reflective surface of a plastic dental mirror. The surface is conductive; such touching can cause personal injury and machine damage.
- Do not service the following parts with the power on when they are removed from their normal operating places in a machine:
  - Power supply units
  - Pumps
  - Blowers and fans
  - Motor generators

  and similar units. (This practice ensures correct grounding of the units.)
- If an electrical accident occurs:
  - Use caution: do not become a victim yourself.
  - Switch off the power.
  - Send the victim to get medical aid.

Safety inspection guide

The purpose of this inspection guide is to assist you in identifying potential unsafe conditions. As each machine was designed and built, required safety items were installed to protect users and service personnel from injury. This guide addresses only those items. You should use good judgment to identify potential safety hazards due to attachment of non-Lenovo features or options not covered by this inspection guide.

If any unsafe conditions are present, you must determine how serious the apparent hazard could be and whether you can continue without first correcting the problem.

Consider these conditions and the safety hazards they present:

- Electrical hazards, especially primary power (primary voltage on the frame can cause serious or fatal electrical shock)
- Explosive hazards, such as a damaged CRT face or a bulging capacitor
- Mechanical hazards, such as loose or missing hardware

To determine whether there are any potential unsafe conditions, use the following checklist at the beginning of every service task. Begin the checks with the power off, and the power cord disconnected.

Checklist:

1. Check exterior covers for damage (loose, broken, or sharp edges).
2. Turn off the computer. Disconnect the power cord.
3. Check the power cord for:
   a. A third-wire ground connector in good condition. Use a meter to measure third-wire ground continuity for 0.1 ohm or less between the external ground pin and the frame ground.
   b. The power cord should be the type specified in the parts list.
   c. Insulation must not be frayed or worn.
4. Check for cracked or bulging batteries.
5. Remove the cover.
6. Check for any obvious non-Lenovo alterations. Use good judgment as to the safety of any non-Lenovo alterations.
7. Check inside the unit for any obvious unsafe conditions, such as metal filings, contamination, water or other liquids, or signs of fire or smoke damage.
8. Check for worn, frayed, or pinched cables.
9. Check that the power-supply cover fasteners (screws or rivets) have not been removed or tampered with.

Handling devices that are sensitive to electrostatic discharge

Any computer part containing transistors or integrated circuits (ICs) should be considered sensitive to electrostatic discharge (ESD). ESD damage can occur when there is a difference in charge between objects. Protect against ESD damage by equalizing the charge so that the machine, the part, the work mat, and the person handling the part are all at the same charge.

Notes:

1. Use product-specific ESD procedures when they exceed the requirements noted here.
2. Make sure that the ESD protective devices you use have been certified (ISO 9000) as fully effective.

When handling ESD-sensitive parts:

- Keep the parts in protective packages until they are inserted into the product.
- Avoid contact with other people.
- Wear a grounded wrist strap against your skin to eliminate static on your body.
- Prevent the part from touching your clothing. Most clothing is insulative and retains a charge even when you are wearing a wrist strap.
- Use the black side of a grounded work mat to provide a static-free work surface. The mat is especially useful when handling ESD-sensitive devices.
- Select a grounding system, such as those listed below, to provide protection that meets the specific service requirement.

Notes:

The use of a grounding system to guard against ESD damage is desirable but not necessary.

  – Attach the ESD ground clip to any frame ground, ground braid, or green-wire ground.
  – When working on a double-insulated or battery-operated system, use an ESD common ground or reference point. You can use coax or connector-outside shells on these systems.
  – Use the round ground prong of the ac plug on ac-operated computers.

Grounding requirements

Electrical grounding of the computer is required for operator safety and correct system function. Proper grounding of the electrical outlet can be verified by a certified electrician.

Safety notices: multilingual translations

The safety notices in this section are provided in English, French, German, Hebrew, Italian, Japanese, and Spanish.

Safety notice 1

Before the computer is powered on after FRU replacement, make sure all screws, springs, and other small parts are in place and are not left loose inside the computer. Verify this by shaking the computer and listening for rattling sounds. Metallic parts or metal flakes can cause electrical shorts.

Avant de remettre l'ordinateur sous tension après remplacement d'une unité en clientèle, vérifiez que tous les ressorts, vis et autres pièces sont bien en place et bien fixées. Pour ce faire, secouez l'unité et assurez-vous qu'aucun bruit suspect ne se produit. Des pièces métalliques ou des copeaux de métal pourraient causer un court-circuit.

Bevor nach einem FRU-Austausch der Computer wieder angeschlossen wird, muß sichergestellt werden, daß keine Schrauben, Federn oder andere Kleinteile fehlen oder im Gehäuse vergessen wurden. Der Computer muß geschüttelt und auf Klappergeräusche geprüft werden. Metallteile oder-splitter können Kurzschlüsse erzeugen.

לפני הפעלת המחשב לאחר החלפת FRU יש לוודא
שכל הברגים, הקפיצים, וחלקים קטנים אחרים נמצאים
במקומם ואינם חופשיים לזוז בתוך המחשב. כדי לוודא
זאת, יש לטלטל את המחשב ולהקשיב לגילוי קולות שקשוק.
חלקי או שבבי מתכת עלולים לגרום לקצרים חשמליים.

Prima di accendere l'elaboratore dopo che é stata effettuata la sostituzione di una FRU, accertarsi che tutte le viti, le molle e tutte le altri parti di piccole dimensioni siano nella corretta posizione e non siano sparse all'interno dell'elaboratore. Verificare ciò scuotendo l'elaboratore e prestando attenzione ad eventuali rumori; eventuali parti o pezzetti metallici possono provocare cortocircuiti pericolosi.

FRU の交換後
品がナ
を振って、カ

Antes de encender el sistema despues de sustituir una FRU, compruebe que todos los tornillos, muelles y demás piezas pequeñas se encuentran en su sitio y no se encuentran sueltas dentro del sistema. Compruébelo agitando el sistema y escuchando los posibles ruidos que provocarían. Las piezas metálicas pueden causar cortocircuitos eléctricos.

Safety notice 3

⚠ DANGER

The battery pack contains small amounts of nickel. Do not disassemble it, throw it into fire or water, or short-circuit it. Dispose of the battery pack as required by local ordinances or regulations. Use only the battery in the appropriate parts listing when replacing the battery pack. Use of an incorrect battery can result in ignition or explosion of the battery.

La batterie contient du nickel. Ne la démontez pas, ne l'exposez ni au feu ni à l'eau. Ne la mettez pas en court-circuit. Pour la mettre au rebut, conformez-vous à la réglementation en vigueur. Lorsque vous remplacez la batterie, veillez à n'utiliser que les modèles cités dans la liste de pièces détachées adéquate. En effet, une batterie inappropriée risque de prendre feu ou d'exploser.

Akkus enthalten geringe Mengen von Nickel. Sie dürfen nicht zerlegt, wiederaufgeladen, kurzgeschlossen, oder Feuer oder Wasser ausgesetzt werden. Bei der Entsorgung die örtlichen Bestimmungen für Sondermüll beachten. Beim Ersetzen der Batterie nur Batterien des Typs verwenden, der in der Ersatzteilliste aufgeführt ist. Der Einsatz falscher Batterien kann zu Entzündung oder Explosion führen.

La batteria contiene piccole quantità di nichel. Non smontarla, gettarla nel fuoco o nell'acqua né cortocircuitarla. Smaltirla secondo la normativa in vigore (DPR 915/82, successive disposizioni e disposizioni locali). Quando si sostituisce la batteria, utilizzare soltanto i tipi inseriti nell'appropriato Catalogo parti. L'impiego di una batteria non adatta potrebbe determinare l'incendio o l'esplosione della batteria stessa.

Las baterías contienen pequeñas cantidades de níquel. No las desmonte, ni recargue, ni las eche al fuego o al agua ni las cortocircuite. Deséchelas tal como dispone la normativa local. Utilice sólo baterías que se encuentren en la lista de piezas al sustituir la batería. La utilización de una batería no apropiada puede provocar la ignición o explosión de la misma.

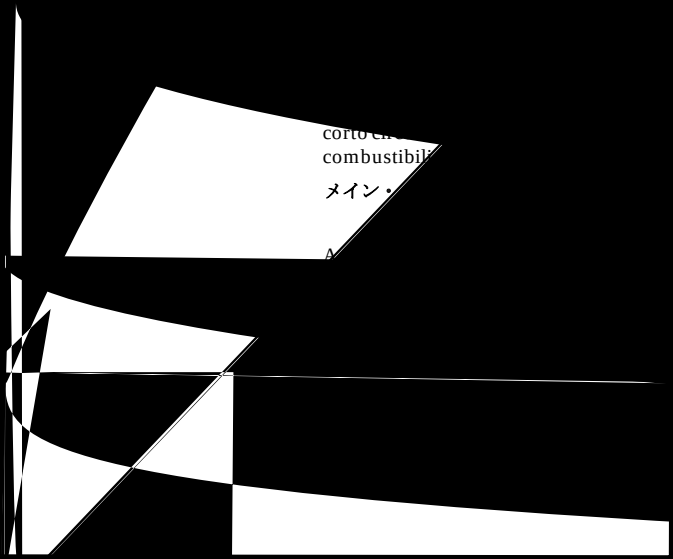
combustibil
メイン・
A

prese
llegare

e todos los cables de
ntinuación, desconecte

Laser compliance statement

Some models of Lenovo computer are equipped from the factory with an optical storage device such as a CD-ROM drive or a DVD-ROM drive. Such devices are also sold separately as options. If one of these drives is installed, it is certified in the U.S. to conform to the requirements of the Department of Health and Human Services 21 Code of Federal Regulations (DHHS 21 CFR) Subchapter J for Class 1 laser products. Elsewhere, the drive is certified to conform to the requirements of the International Electrotechnical Commission (IEC) 825 and CENELEC EN 60 825 for Class 1 laser products.

If a CD-ROM drive, a DVD-ROM drive, or another laser device is installed, note the following:

⚠ CAUTIONS

Use of controls or adjustments any1
f .248 0 TD -.0019 Tc (o4t 0 TD -c [(RO)6.1(M)0 -595.specTf .72 0 TD 0 Tc <0231>Tj /T 0 Tc <0231

Opening the CD-ROM drive, the DVD-ROM drive, or any other optical storage device could result in exposure to hazardous laser radiation. There are no serviceable parts inside those drives. **Do not open**.

A CD-ROM drive, a DVD-ROM drive, or any other storage device installed may contain an embedded Class 3A or Class 3B laser diode. Note the following:

⚠ DANGER

Emits visible and invisible laser radiation when open. Do not stare into the beam, do not view directly with optical instruments, and avoid direct exposure to the beam.

Radiação por raio laser ao abrir. Não olhe fixo no feixe de luz, não olhe diretamente por meio de instrumentos óticos e evite exposição direta com o feixe de luz.

开启时会有可见和不可见的激光辐射。请勿凝视光束，请勿使用光学仪器观察，请勿直接曝露在光束下。

Rayonnement laser si carter ouvert. Évitez de fixer le faisceau, de le regarder directement avec des instruments optiques, ou de vous exposer au rayon.

Laserstrahlung bei geöffnetem Gerät. Nicht direkt oder über optische Instrumente in den Laserstrahl sehen und den Strahlungsbereich meiden.

Kinyitáskor lézersugár ! Ne nézzen bele se szabad szemmel, se optikai eszközökkel. Kerülje a sugárnyalábbal való érintkezést!

Aprendo l'unità vengono emesse radiazioni laser. Non fissare il fascio, non guardarlo direttamente con strumenti ottici e evitare l'esposizione diretta al fascio.

Radiación láser al abrir. No mire fijamente ni examine con instrumental óptico el haz de luz. Evite la exposición directa al haz.

Important service information

This chapter presents the following important service information:

- "Strategy for replacing FRUs" on page 16
  - "Strategy for replacing a hard disk drive" on page 17
  - "Important notice for replacing a system board" on page 17
- "Important information about replacing RoHS compliant FRUs" on page 18

Important:
BIOS and device driver fixes are customer-installable. The BIOS and device drivers are posted on the customer support site: http://consumersupport.lenovo.com/.

Strategy for replacing FRUs

Before replacing parts:

Make sure that all software fixes, drivers, and BIOS downloads are installed before replacing any FRUs listed in this manual.

After a system board is replaced, ensure that the latest BIOS is loaded to the system board before completing the service action.

To download software fixes, drivers, and BIOS, follow the steps below:

1. Go to http://consumersupport.lenovo.com/
2. Enter the serial number or select a product or use Lenovo smart downloading.
3. Select the BIOS/Driver/Applications and download.
4. Follow the directions on the screen and install the necessary software.

Use the following strategy to prevent unnecessary expense for replacing and servicing FRUs:

- If you are instructed to replace an FRU, but the replacement does not solve the problem, reinstall the original FRU before you continue.
- Some computers have both a processor board and a system board. If you are instructed to replace either of them, and replacing one of them does not solve the problem, reinstall that board, and then replace the other one.
- If an adapter or a device consists of more than one FRU, any of the FRUs may be the cause of the error. Before replacing the adapter or device, remove the FRUs one by one to see if the symptoms change. Replace only the

be

Important information about replacing RoHS compliant FRUs

RoHS, The Restriction of Hazardous Substances in Electrical and Electronic Equipment Directive (2002/95/EC) is a European Union legal requirement affecting the global electronics industry. RoHS requirements must be implemented on Lenovo products placed on the market after June 2006. Products on the market before June 2006 are not required to have RoHS compliant parts. If the original FRU parts are non-compliant, replacement parts can also be non-compliant. In all cases if the original FRU parts are RoHS compliant, the replacement part must also be RoHS compliant.

Note: RoHS and non-RoHS FRU part numbers with the same fit and function are identified with unique FRU part numbers.

Lenovo plans to transit to RoHS compliance well before the implementation date and expects its suppliers to be ready to support Lenovo's requirements and schedule in the EU. Products sold in 2005 and 2006 will contain some RoHS compliant FRUs. The following statement pertains to these products and any product Lenovo produces containing RoHS compliant FRUs.

RoHS compliant FRUs have unique FRU part numbers. Before or after the RoHS implementation date, failed RoHS compliant parts must always be replaced with RoHS compliant ones, so only the FRUs identified as compliant in the system HMM or direct substitutions for those FRUs may be used.

Products marketed before June 2006		Products marketed after June 2006	
Current or original part	**Replacement FRU**	**Current or original part**	**Replacement FRU**
Non-RoHS	Can be Non-RoHS	Must be RoHS	Must be RoHS
Non-RoHS	Can be RoHS		
Non-RoHS	Can sub to RoHS		
RoHS	Must be RoHS		

Note: A direct substitution is a part with a different FRU part number that is automatically shipped by the distribution center at the time of the order.

General checkout

This chapter presents the following information:

- "What to do first" on page 20
- "Power system checkout" on page 21

Before you go to the checkout, make sure to read the following important notes:

Important notes:

- **Only certified trained personnel can service the computer.**
- **Before replacing any FRU, read the entire page on removing and replacing FRUs.**
- **When you replace FRUs, use new nylon-coated screws.**
- **Be extremely careful during such write operations as copying, saving, or formatting.** Drives in the computer that you are servicing sequence might have been altered. If you select an incorrect drive, data or programs might be overwritten.
- **Replace an FRU only with another FRU of the correct model.** When you replace an FRU, make sure that the machine model and the FRU part number are correct by referring to the FRU parts list.
- **An FRU should not be replaced just because of a single, unreproducible failure.** Single failures can occur for a variety of reasons that have nothing to do with a hardware defect, such as cosmic radiation, electrostatic discharge, or software errors. Consider replacing an FRU only when a problem recurs. If you suspect that an FRU is defective, clear the error logs and run the test again. If the error does not recur, do not replace the FRU.
- **Be careful not to replace a nondefective FRU.**

What to do first

When you do return an FRU, you must include the following information in the parts exchange form or parts return form that you attach to it:

1. Name and phone number of servicer
2. Date of service
3. Date on which the machine failed
4. Date of purchase
5. Procedure index and page number in which the failing FRU was detected
6. Failing FRU name and part number
7. Machine type, model number, and serial number
8. Customer's name and address

Note for warranty: During the warranty period, the customer may be responsible for repair costs if the computer damage was caused by misuse, accident, modification, unsuitable physical or operating environment, or improper maintenance by the customer.

The following is a list of some common items that are not covered under warranty and some symptoms that might indicate that the system was subjected to stress beyond normal use.

Before checking problems with the computer, determine whether the damage is covered under the warranty by referring to the following list:

The following are not covered under warranty:

- LCD panel cracked from the application of excessive force or from being dropped
- Scratched (cosmetic) parts
- Distortion, deformation, or discoloration of the cosmetic parts
- Plastic parts, latches, pins, or connectors that have been cracked or broken by excessive force
- Damage caused by liquid spilled into the system
- Damage caused by the improper insertion of a PC Card or the installation of an incompatible card
- Improper disk insertion or use of an optical drive
- Diskette drive damage caused by pressure on the diskette drive cover, foreign material in the drive, or the insertion of a diskette with multiple labels
- Damaged or bent diskette eject button
- Fuses blown by attachment of a nonsupported device
- Forgotten computer password (making the computer unusable)
- Sticky keys caused by spilling a liquid onto the keyboard
- Use of an incorrect AC adapter on laptop products

The following symptoms might indicate damage caused by nonwarranted activities:

- Missing parts might be a symptom of unauthorized service or modification.
- If the spindle of a hard disk drive becomes noisy, it may have been subjected to excessive force, or dropped.

Power system checkout

To verify a symptom, follow the steps below:

1. Turn off the computer.
2. Remove the battery pack.
3. Connect the AC adapter.
4. Make sure that power is supplied when you turn on the computer.
5. Turn off the computer.
6. Disconnect the AC adapter and install the charged battery pack.
7. Make sure that the battery pack supplies power when you turn on the computer.

If you suspect a power problem, see the appropriate one of the following power supply checkouts:

- "Checking the AC adapter" on page 21
- "Checking operational charging" on page 21
- "Checking the battery pack" on page 22

Checking the AC adapter

You are here because the computer fails only when the AC adapter is used.

- If the power-on indicator does not turn on, check the power cord of the AC adapter for correct continuity and installation.
- If the computer does not charge during operation, go to "Checking operational charging" on page 21.

To check the AC adapter, follow the steps below:

1. Unplug the AC adapter cable from the computer.
2. Measure the output voltage at the plug of the AC adapter cable. See the following figure:

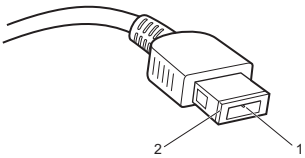

Pin	Voltage (V DC)
1	+20
2	0

Note: Output voltage for the AC adapter pin No. 2 may differ from the one you are servicing.

3. If the voltage is not correct, replace the AC adapter.
4. If the voltage is acceptable, do the following:

- Replace the system board.
- If the problem persists, go to "Lenovo B50-30/B50-30 Touch/B50-45/B50-70" on page 27.

Note: Noise from the AC adapter does not always indicate a defect.

Checking operational charging

To check whether the battery charges properly during operation, use a discharged battery pack or a battery pack that has less than 50% of the total power remaining when installed in the computer.

Perform operational charging. If the battery status indicator or icon does not light on, remove the battery pack and let it return to room temperature. Reinstall the battery pack. If the charge indicator or icon is still off, replace the battery pack.

If the charge indicator still does not light on, replace the system board. Then reinstall the battery pack. If it is still not charged, go to the next section.

Checking the battery pack

Battery charging does not start until the Power Meter shows that less than 95% of the total power remains; under this condition the battery pack can charge to 100% of its capacity. This protects the battery pack from being overcharged or from having a shortened life.

To check your battery, move your cursor to the Power Meter icon in the icon tray of the Windows® taskbar and wait for a moment (but do not click it), and the percentage of battery power remaining is displayed. To get detailed information about the battery, double-click the Power Meter icon.

Note: If the battery pack becomes hot, it may not be able to be charged. Remove it from the computer and leave it at room temperature for a while. After it cools down, reinstall and recharge it.

Related service information

This chapter presents the following information:

- "Restoring the factory contents by using Recovery Disc Set" on page 23
- "Passwords" on page 24
- "Power management" on page 25

Restoring the factory contents by using Recovery Disc Set

Restore of factory default

This topic provides information about the recovery programs that are available for you to recover the computer settings.

- Windows 7: The following recovery programs are available on computers with a Windows 7 operating system:
  - OneKey Recovery Pro

  The OneKey Recovery Pro program enables you to back up all your hard disk drive contents, including the operating system, data files, software programs, and personal settings. You can designate where the OneKey Recovery Pro program stores the backup. After you have backed up the contents on the hard disk drive, you can restore the complete contents of the hard disk drive, restore only the desired files, or restore only the Windows operating system and applications.
  - Product Recovery

  The Product Recovery program enables you to restore the computer settings to the factory default settings through recovery media.

  Attention: When you use the Product Recovery program to restore the computer settings, all the data you have stored on the hard disk drive will be deleted and the computer settings will be restored to the factory default settings. During the restoring process, you will be given the option to save one or more files currently on the hard disk drive to other media before the data is deleted.
- Windows 8: The preinstalled Windows recovery program enables you to do the following:
  - Refresh the computer without losing personal files
  - Restore the computer to the factory default settings

  Attention: When you use the Windows recovery program to restore the computer settings, all the data you have stored on the hard disk drive will be deleted and the computer will be restored to the factory default settings. To avoid data loss, back up your data in advance.
  - Configure the advanced startup options

    The advanced startup options enable you to do the following:

    –Change the startup settings of the Windows operating system

    –Restore the Windows operating system from a system image

    –Change the startup settings of the Windows operating system

For more information about the recovery solutions, refer to the help information system of the programs.

Power management

Note: Power management modes are not supported for APM operating system.

To reduce power consumption, the computer has three power management modes: screen blank, sleep (standby), and hibernation.

Screen blank state

If the time set on the “Turn off monitor” timer in the operating system expires, the LCD backlight turns off. You can also turn off the LCD backlight by pressing F9 [F9].

To end screen blank state and resume normal operation, press F9 .

Putting the computer to sleep or shutting it down

When you have finished working with your computer, you can put it to sleep or shut it down.

Putting your computer to sleep

If you will be away from your computer for only a short time, put the computer to sleep. When the computer is in sleep mode, you can quickly wake it to resume use, bypassing the startup process. To put the computer to sleep:

- **For the Windows 7 operating system:**
  - Click **Start** **Sleep**.
- **For the Windows 8 operating system:**
  - Open the charms bar, then select **Settings** **Power** **Sleep**.

Attention: Wait until the power indicator light starts blinking (indicating that the computer is in sleep mode) before you move your computer. Moving your computer while the hard disk is spinning can damage the hard disk, causing loss of data.

To wake the computer, do one of the following:

- Press any key on the keyboard.
- Press the power button.

Shutting down the computer

If you are not going to use your computer for a long time, shut it down. To shut down your computer:

- **For Window 7 operating system:** Click Start → **Shut down**.
- **For Window 8 operating system:**
  - Open the charms bar, then select **Settings** .

  - Select **Power** → **Shut down**.

Table 1. Specifications (continued)

Feature	Description
I/O ports	• Combo audio jack × 1 • RJ45 × 1 • HDMI port × 1 • USB 2.0 × 2, USB 3.0 × 1 or USB 2.0 × 1, USB 3.0 × 2 • 4 in 1 slot × 1 (SD, SDHC, SDXC, MMC)
Audio	• Combo audio jack × 1 • Speaker × 2 • Built-in microphone × 1 (on select models)
Video	CRT× 1, HDMI port × 1
WLAN	• Intel 1x1 11ac + BT4.0 combo (on select models) • Intel 2x2 11ac + BT4.0 combo (on select models) • Non-Intel 1x1 11bgn + BT4.0 combo • Non-Intel 1x1 11ac + BT4.0 combo
WWAN	NA
Bluetooth	Combined in combo card
Keyboard	6-row Lenovo Keyboard
Touch pad	One piece TouchPad
Integrated camera	0.3M, 720p (on select models)
Battery	Li-Cyllinder
AC adapter	• 45W, 20V for integrated graphic model • 65W, 20V for discrete graphic model
Pre-installed operating system	Linpus lite/DOS/Win7/Win 8.1/Win8.1 downgrade

Status indicators

The system status indicators below show the computer status:

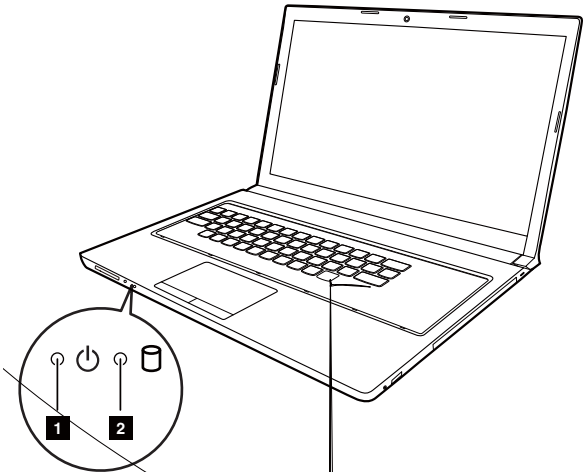

Table 2. Status indicators

Indicator	Status	Meaning
Power and battery status indicator	**Green**	• The battery has a charge between 20% and 100% and the AC adapter is not connected to the computer. • The battery has a charge between 80% and 100% and the AC power adapter is connected to the computer.
	Blinking Green	• The battery has a charge between 20% and 80% and the AC power adapter is connected to the computer. • The computer is in sleep mode.
	Amber	The battery has a charge between 5% and 20% and the AC adapter is not connected to the computer.
	Blinking amber	The battery has a charge of 20% or less and the AC power adapter is connected to the computer.
	Off	• The battery is detached. • The battery has a charge of 5% or less and the AC adapter is not connected to the computer. • The computer is powered off or in hibernate mode.
Hard disk drive indicator	**On**	The hard disk drive is reading or writing data.

Fn key combinations

The following table shows the function of each combination of Fn with a function key.

Table 3. Fn key combinations

Key combination	Description
Fn + Home:	Activate the pause function.
Fn + End:	Activate the break function.
Fn + PgUp:	Enable/disable the scroll lock.
Fn + PgDn:	Activate the insert function.

Hotkeys

The hotkeys are located in the function key row of the keyboard. By pressing the appropriate hotkey, you can change system settings instantly.

The following describes the function of each hotkey.

Table 4. Hotkeys

F1 :	Mutes/unmutes the sound.	F7 :	Enables/disables Airplane mode.
F2 :	Decreases the volume level.	F8 :	Switches the active program.
F3 :	Increases the volume level.	F9 :	Turns the LCD screen backlight on/off.
F4 :	Closes the currently active window.	F10 :	Projects to a connected display.
F5 :	Refreshes the desktop or the currently active window.	F11 :	Decreases display brightness.
F6 :	Enables/disables the touchpad.	F12 :	Increases display brightness.

FRU replacement notices

This section presents notices related to removing and replacing parts. Read this section carefully before replacing any FRU.

Screw notices

Loose screws can cause a reliability problem. In the Lenovo computer, this problem is addressed with special nylon-coated screws that have the following characteristics:

- They maintain tight connections.
- They do not easily come loose, even with shock or vibration.
- They are harder to tighten.
- Each one should be used only once.

Do the following when you service this machine:

- Keep the screw kit in your tool bag.
- Remove screws carefully for reuse.
- Use a torque screwdriver if you have one.

Tighten screws as follows:

- **Plastic to plastic**

  Turn an additional 90° after the screw head touches the surface of the plastic part:

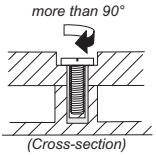

- **Logic card to plastic**

  Turn an additional 180° after the screw head touches the surface of the logic card:

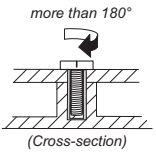

- **Torque driver**

  If you have a torque screwdriver, refer to the “Torque” column for each step.

- Make sure that you use the correct screws. If you have a torque screwdriver, tighten all screws firmly to the torque shown in the table. **Never use a screw that you removed. Use a new one. Make sure that all screws are tightened firmly.**
- Ensure torque screwdrivers are calibrated correctly following country specifications.

Removing and replacing an FRU

This section presents exploded figures with the instructions to indicate how to remove and replace the FRU. Make sure to observe the following general rules:

1. Do not attempt to service any computer unless you have been trained and certified. An untrained person runs the risk of damaging parts.
2. Before replacing any FRU, review "FRU replacement notices" on page 31.
3. Begin by removing any FRUs that have to be removed before the failing FRU. Any of such FRUs are listed at the top of the page. Remove them in the order in which they are listed.
4. Follow the correct sequence in the steps to remove the FRU, as given in the figures by the numbers in square callouts.
5. When turning a screw to replace an FRU, turn it in the direction as given by the arrow in the figure.
6. When removing the FRU, move it in the direction as given by the arrow in the figure.
7. To put the new FRU in place, reverse the removal procedures and follow any of the notes that pertain to replacement. For information about connecting and arranging internal cables, see "Locations" on page 65.
8. When replacing an FRU, use the correct screw as shown in the procedures.

⚠ DANGER

Before removing any FRU, turn off the computer, unplug all power cords from electrical outlets, remove the battery pack, and then disconnect any of the interconnecting cables.

Attention: After replacing an FRU, do not turn on the computer until you have made sure that all screws, springs, and other small parts are in place and none are loose inside the computer. Verify this by shaking the computer gently and listening for rattling sounds. Metallic parts or metal flakes can cause electrical short circuits.

Attention: The system board is sensitive to, and can be damaged by, electrostatic discharge. Before touching it, establish personal grounding by touching a ground point with one hand or using an electrostatic discharge (ESD) strap (P/N 6405959) to remove potential shock reasons.

Note: The illustrations used in this section are of the Lenovo B50-70, unless otherwise stated.

1010 Battery pack

> ⚠ **DANGER**
> • Only use the battery specified in the parts list for your computer. Any other battery could ignite or explode.

Figure 1. Removal steps of battery pack

Unlock the manual battery latch **1**. While holding the spring-loaded battery latch in the unlocked position **2**, then remove the battery pack in the direction shown by arrow **3**.

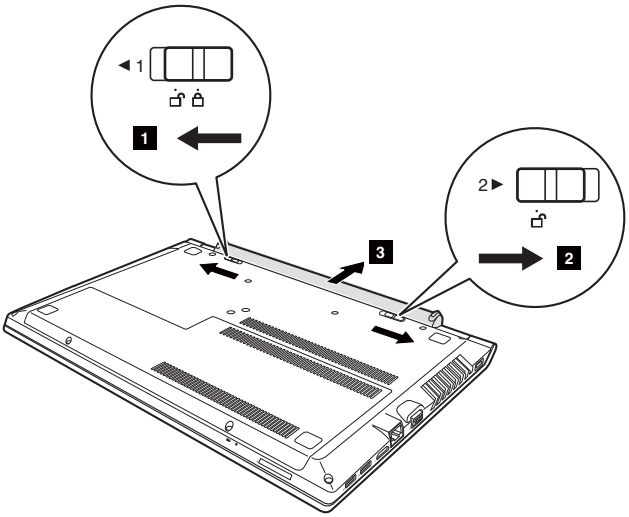

When installing: Install the battery pack along the slide rails of the slot. Then make sure the manual battery latch in the lock position.

1020 Optical drive

For access, remove this FRU:
“1010 Battery pack” on page 33

Figure 2. Removal steps of optical drive

Remove the screw 1 . Then remove the optical drive by arrow 2 .

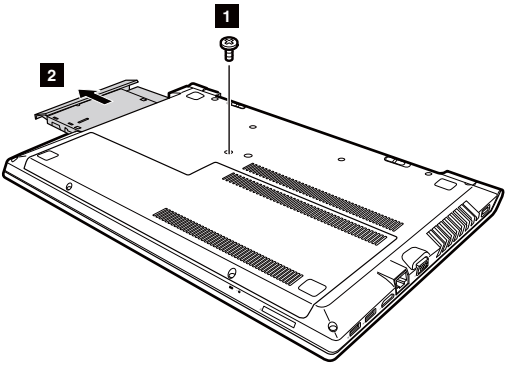

Step	Screw (quantity)	Color	Torque
1	M2 x 6 mm, flat-head, nylok-coated (1)	Black	1.5~2.0kgf.cm

Unsnap to remove the optical drive bezel in the direction by arrow 3 .

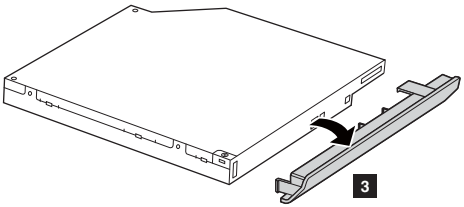

Figure 2. Removal steps of optical drive (continued)

Remove two screws **4** and remove the optical drive bracket in the direction by arrow **5** .

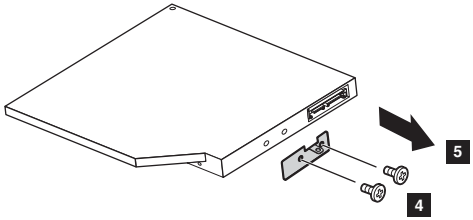

Step	Screw (quantity)	Color	Torque
4	M2 x 3 mm, flat-head, nylok-coated (2)	Black	1.0~1.5kgf.cm

1030 Bottom slot cover

For access, remove this FRU:
“1010 Battery pack” on page 33

Figure 3. Removal steps of bottom slot cover

Remove the two screws 1 . Then remove the bottom slot cover by arrow 2 .

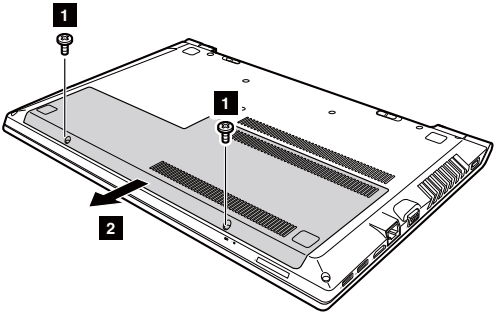

Step	Screw (quantity)	Color	Torque
1	M2.5 x 5 mm, flat-head, nylok-coated (2)	Black	2.0~2.5kgf.cm

1040 Hard disk drive

For access, remove these FRUs in order:

- "1010 Battery pack" on page 33
- "1030 Bottom slot cover" on page 36

Attention:

- **Do not drop the hard disk drive or apply any physical shock to it.** The hard disk drive is sensitive to physical shock. Improper handling can cause damages and permanent loss of data.
- Before removing the drive, suggest the customer to backup all the information on it if possible.
- Never remove the drive while the system is operating or in suspend mode.

Figure 4. Removal steps of hard disk drive

Remove two frame fixing screws **1** . Remove the hard disk drive in the direction by arrow **2** .

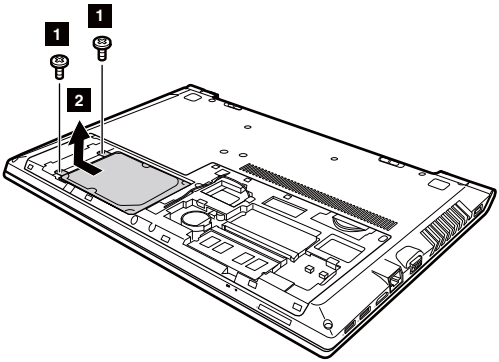

Step	Screw (quantity)	Color	Torque
1	M2.5 x 5 mm, flat-head, nylok-coated (2)	Black	2.0~2.5kgf.cm

Figure 4. Removal steps of hard disk drive (continued)

Remove four screws 3 and detach the hard disk drive from the metal frame in the direction shown by arrow 4 .

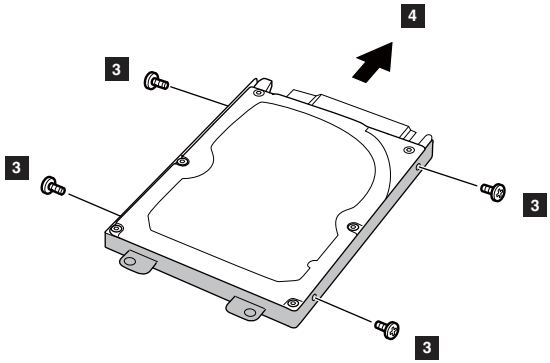

Step	Screw (quantity)	Color	Torque
3	M3 x 3 mm, flat-head, nylok-coated (4)	Silver	2.5~3.0kgf.cm

When installing: Make sure that the HDD connector is attached firmly.

1050 DIMM

For access, remove these FRUs in order:

- "1010 Battery pack" on page 33
- "1030 Bottom slot cover" on page 36

Figure 5. Removal steps of DIMM

Release the two latches on both edges of the socket at the same time in the direction shown by arrows **1**, and then unplug the DIMM in the direction shown by arrow **2**.

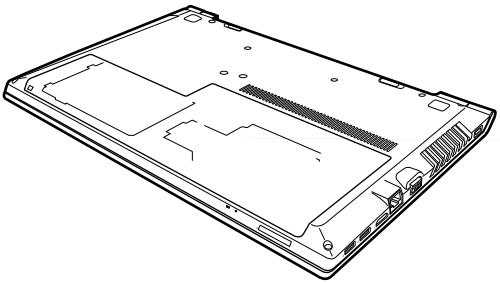

When installing:

- Insert the notched end of the DIMM into the socket. Push the DIMM firmly, and pivot it until it snaps into the place. Make sure that it is firmly fixed in the slot and difficult to be moved.
- **For B50-30:**

  Two memory channels are supported. Both channels have memory of same size and ranks.It is a must that SODIMM is inserted in SLOT1.

1060 PCI Express Mini Card for wireless LAN/WAN

For access, remove these FRUs in order:

- "1010 Battery pack" on page 33
- "1030 Bottom slot cover" on page 36

Figure 6. Removal steps of PCI Express Mini Card for wireless LAN/WAN

Disconnect the two wireless LAN cables (black, white) **1**, and then remove the screws **2**.

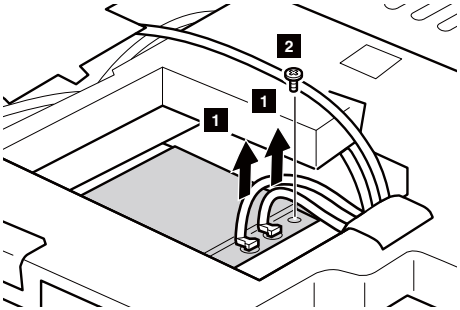

In step **1**, unplug the jacks by using the removal tool antenna RF connector (P/N: 08K7159), or pick up the connectors with your fingers and gently unplug them in the direction shown by arrows.

Notes: wireless LAN card has 2 cables in step **1**.

Wireless LAN card in some models may have 3 cables in step **1**.

Step	Screw (quantity)	Color	Torque
2	M2 x 3 mm, flat-head, nylok-coated (1)	Black	1.0~1.5kgf.cm

Remove the card in the direction shown by arrow **3**.

When installing: Plug the black cable into the jack labeled **AUX** and the white cable into the jack labeled **MAIN**.

1070 Keyboard

For access, remove this FRU:

- “1010 Battery pack” on page 33

Figure 7. Removal steps of keyboard

Remove three screws 1.

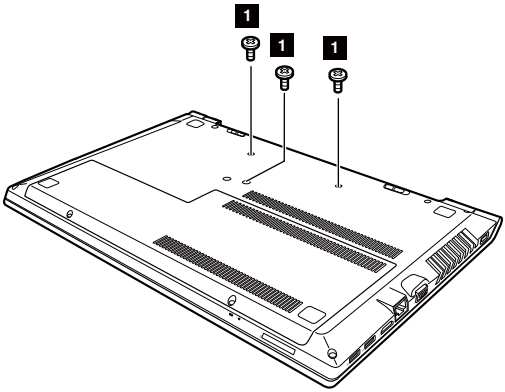

Step	Screw (quantity)	Color	Torque
1	M2 x 6 mm, flat-head, nylok-coated (3)	Black	1.5~2.0kgf.cm

Pull to unsnap the keyboard in the direction by arrows 2 .

Figure 7. Removal steps of keyboard (continued)

Lift up the keyboard 4 and disconnect the connector in the direction shown by arrows 5 6. Be careful not to damage the connector.

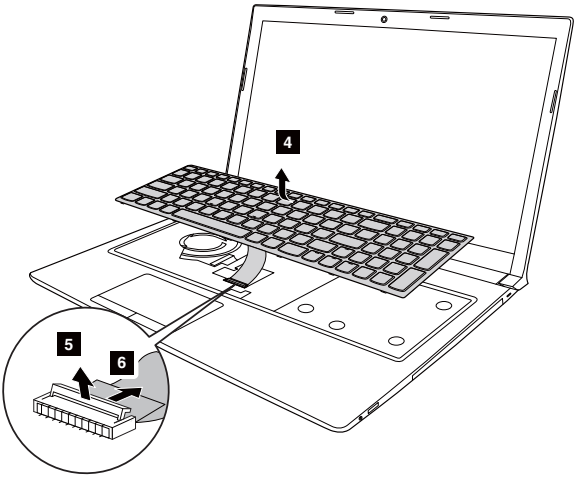

When installing: Make sure that the keyboard connector is attached firmly to the system board.

1080 Keyboard bezel

For access, remove these FRUs:

- “1010 Battery pack” on page 33
- “1020 Optical drive” on page 34
- “1030 Bottom slot cover” on page 36
- “1070 Keyboard” on page 41

Figure 8. Removal steps of keyboard bezel

Remove nine screws **1** and three screws **2** .

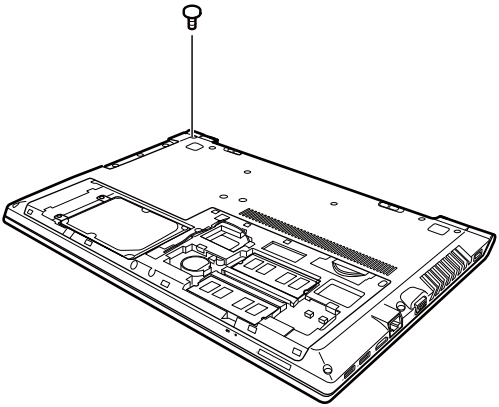

Step	Screw (quantity)	Color	Torque
	M2.5 x 5 mm, flat-head, nylok-coated (9)	Black	2.0~2.5kgf.cm
	M2 x 2 mm, flat-head, nylok-coated (3)	Black	1.0~1.5kgf.cm

Figure 8. Removal steps of keyboard bezel (continued)

Disconnect the three connectors in the direction shown by arrow **3** and remove the keyboard bezel by arrow **4**.

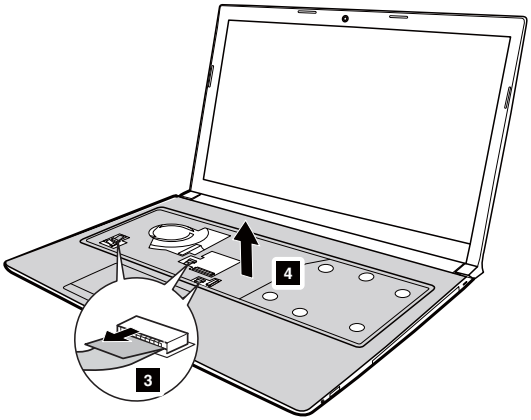

When installing: Make sure that all the connectors are attached firmly.

1090 Finger print and power board

For access, remove these FRUs:

- “1010 Battery pack” on page 33
- “1020 Optical drive” on page 34
- “1030 Bottom slot cover” on page 36
- “1070 Keyboard” on page 41
- “1080 Keyboard bezel” on page 43

Figure 9. Removal steps of finger print and power board

Disconnect the finger print connect in the direction by arrow 1 2 . Remove the screw 3 . Remove the finger print bracket in the direction by arrow 4 . Then remove the finger print by arrow 4 .

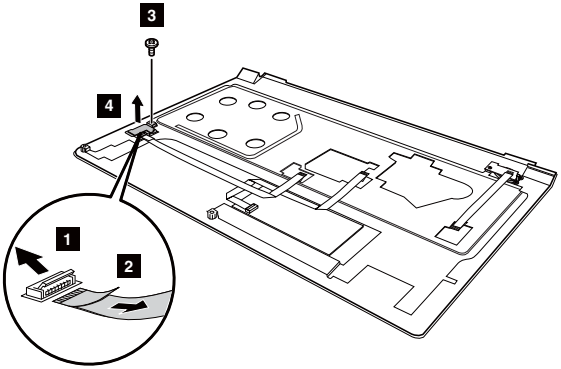

Step	Screw (quantity)	Color	Torque
2	M2 x 3 mm, flat-head, nylok-coated (1)	Black	1.0~1.5kgf.cm

Figure 9. Removal steps of finger print and power board (Continued)

Peel off the adhesive of the power board FPC. Remove the screw **5** . Then remove the power board in the direction by arrow **6** .

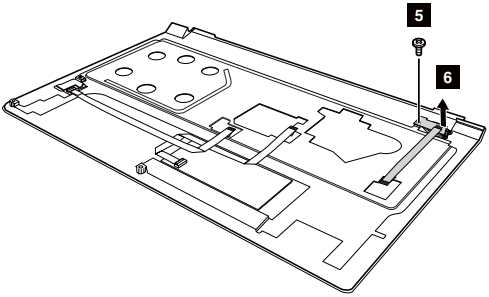

Step	Screw (quantity)	Color	Torque
2	M2 x 3 mm, flat-head, nylok-coated (1)	Black	1.0~1.5kgf.cm

When installing: Make sure that the finger print connector is attached firmly.

1100 USB board and ODD board

For access, remove these FRUs:

- "1010 Battery pack" on page 33
- "1020 Optical drive" on page 34
- "1030 Bottom slot cover" on page 36
- "1070 Keyboard" on page 41
- "1080 Keyboard bezel" on page 43

Figure 10. Removal steps of USB board and ODD board

Disconnect two connectors in the direction shown by arrow **1**. Remove the screws **2**. Then remove the USB board and ODD board in the direction shown by arrow **3** .

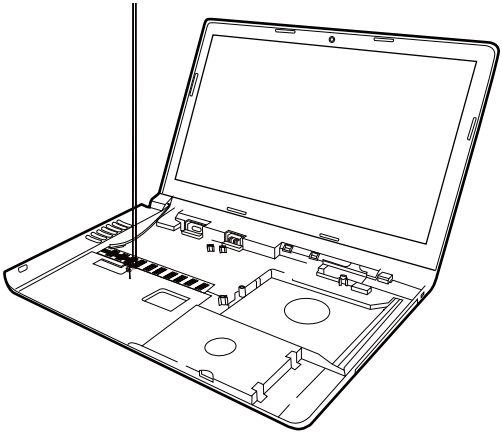

Step	Screw (quantity)	Color	Torque
	M2.5 x 4 mm, flat-head, nylok-coated (3)	Black	2.0~2.5kgf.cm

When installing: Make sure that the ODD and USB connectors are attached firmly.

1110 Led board

For access, remove these FRUs:

- “1010 Battery pack” on page 33
- “1020 Optical drive” on page 34
- “1030 Bottom slot cover” on page 36
- “1070 Keyboard” on page 41
- “1080 Keyboard bezel” on page 43

Figure 11. Removal steps of led board

Detach the adhesive of the led board by arrow 1 .Peel off the FPC of the led board by arrow 2 to remove it.

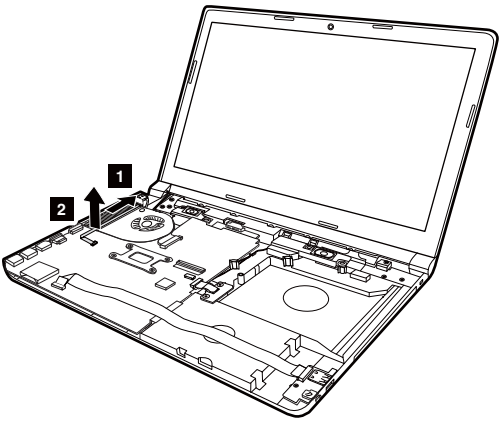

When installing: Make sure that the led connector is attached firmly.

1120 Docking board (on select models)

For access, remove these FRUs:

- “1010 Battery pack” on page 33
- “1020 Optical drive” on page 34
- “1030 Bottom slot cover” on page 36
- “1070 Keyboard” on page 41
- “1080 Keyboard bezel” on page 43

Figure 12. Removal steps of docking board

Disconnect two connectors in the direction by arrow 1 2 . Remove two screws 3 . Then remove the docking board in the direction by arrow 4 .

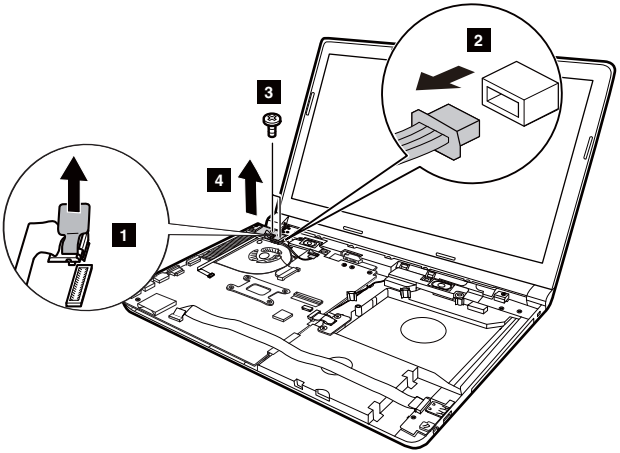

Step	Screw (quantity)	Color	Torque
3	M2.5 x 4 mm, flat-head, nylok-coated (2)	Black	2.0~2.5kgf.cm

When installing: Make sure that the two connectors are attached firmly.

1130 System board

Important notices for handling the system board:

When handling the system board, bear the following in mind.

- Be careful not to drop the system board on a bench top that has a hard surface, such as metal, wood, or composite.
- Avoid rough handling of any kind.
- In the whole process, make sure not to drop or stack the system board.
- If you put a system board down, make sure to put it only on a padded surface such as an ESD mat or conductive corrugated material.

For access, remove these FRUs:

- “1010 Battery pack” on page 33
- “1020 Optical drive” on page 34
- “1030 Bottom slot cover” on page 36
- “1040 Hard disk drive” on page 37
- “1050 DIMM” on page 39
- “1060 PCI Express Mini Card for wireless LAN/WAN” on page 40
- “1070 Keyboard” on page 41
- “1080 Keyboard bezel” on page 43
- “1110 Led board” on page 48

Figure 13. Removal steps of system board

Disconnect the speaker connector in the direction by arrow **1**.

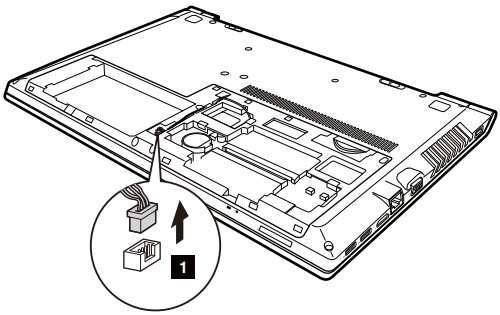

Figure 13. Removal steps of system board (continued)

Disconnect the ODD board connector and the USB board connector in the direction shown by arrow 2 . Then disconnect the EDP connector in the direction shown by arrow 3 .

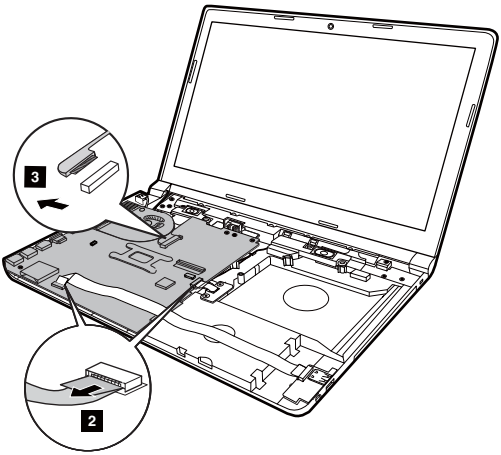

Remove two screws 4 , screw 5 and two screws 6 .

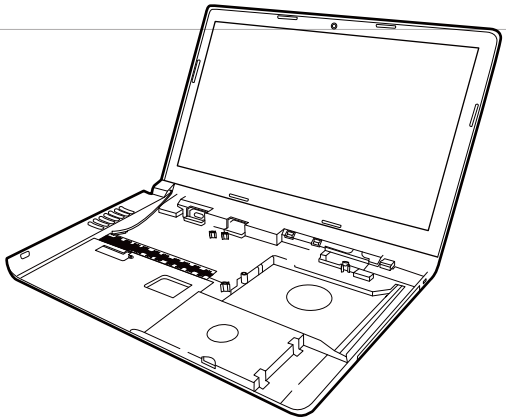

Step	Screw (quantity)	Color	Torque
	M2.5 x 4 mm, flat-head, nylok-coated (2)	Black	2.0~2.5kgf.cm
	M2 x 5 mm, flat-head, nylok-coated (1)	Silver	1.5~2.0kgf.cm
	M2 x 3 mm, flat-head, nylok-coated (2)	Black	1.0~1.5kgf.cm

Figure 13. Removal steps of system board (continued)

For B50-70 (on select models):

Disconnect the two docking connectors by arrows 7 8 , then remove the system board in the direction by arrow 9 .

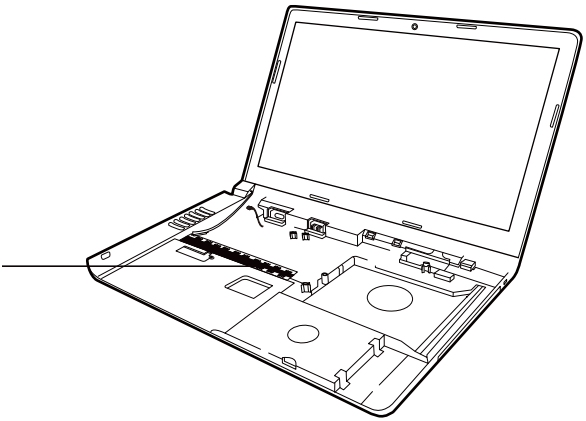

For B50-30/B50-30 Touch/B50-45/B50-70:

Pull the DC-IN connector from its cavity in the direction by arrow and remove the system board in the direction shown by arrow .

When installing:

- Make sure USB, HDMI, and the VGA of the system board attached into its holes on the base properly. Improper placement of the jacks may cause damage.
- Make sure that the connectors are attached firmly to the system board.

1140 Fan and heat sink assembly

For access, remove these FRUs in order:

- “1010 Battery pack” on page 33
- “1020 Optical drive” on page 34
- “1030 Bottom slot cover” on page 36
- “1040 Hard disk drive” on page 37
- “1050 DIMM” on page 39
- “1060 PCI Express Mini Card for wireless LAN/WAN” on page 40
- “1070 Keyboard” on page 41
- “1080 Keyboard bezel” on page 43
- “1110 Led board” on page 48
- “1130 System board” on page 50

Figure 14. Removal steps of fan and heat sink assembly

Disconnect the fan connector in the direction by arrow 1. Remove the screw 2 and six screws 3. Then remove the fan and heat sink in the direction as shown by arrow 4.

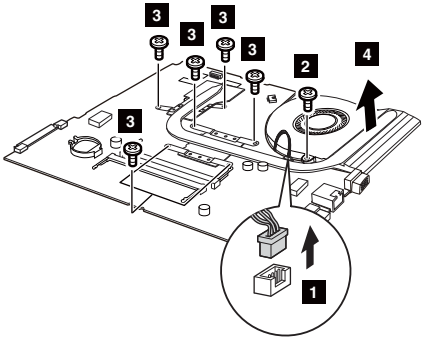

Step	Screw (quantity)	Color	Torque
2	M2 x 5 mm, flat-head, nylok-coated (1)	Silver	1.5~2.0kgf.cm
3	M2 x 3 mm, flat-head, nylok-coated (6)	Black	1.0~1.5kgf.cm

When installing: Make sure that all the fan and DC-IN connectors are attached firmly.

1150 Speakers and battery board

For access, remove these FRUs:

- “1010 Battery pack” on page 33
- “1020 Optical drive” on page 34
- “1030 Bottom slot cover” on page 36
- “1040 Hard disk drive” on page 37
- “1050 DIMM” on page 39
- “1060 PCI Express Mini Card for wireless LAN/WAN” on page 40
- “1070 Keyboard” on page 41
- “1080 Keyboard bezel” on page 43
- “1110 Led board” on page 48
- “1130 System board” on page 50

Figure 15. Removal steps of speakers and battery board

Remove two screws **1** and four screws **2**. Remove the speakers and the battery board in the direction by arrow **3**.

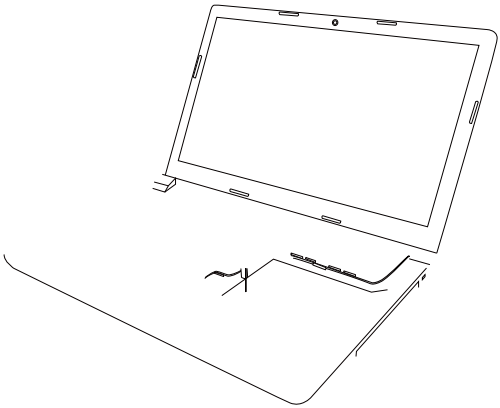

Step	Screw (quantity)	Color	Torque
	M2.5 x 4 mm, flat-head, nylok-coated (2)	Black	2.0~2.5kgf.cm
	M2 x 2 mm, flat-head, nylok-coated (4)	Black	1.0~1.5kgf.cm

When installing: Route the speakers cables along the cable guides.

1160 LCD unit and base cover

For access, remove these FRUs:

- “1010 Battery pack” on page 33
- “1020 Optical drive” on page 34
- “1030 Bottom slot cover” on page 36
- “1040 Hard disk drive” on page 37
- “1050 DIMM” on page 39
- “1060 PCI Express Mini Card for wireless LAN/WAN” on page 40
- “1070 Keyboard” on page 41
- “1080 Keyboard bezel” on page 43
- “1100 USB board and ODD board” on page 47
- “1110 Led board” on page 48
- “1120 Docking board (on select models)” on page 49
- “1130 System board” on page 50

Figure 16. Removal steps of LCD unit and base cover

Release the two antenna cables from the cable guides by arrows. Remove six screws 1.

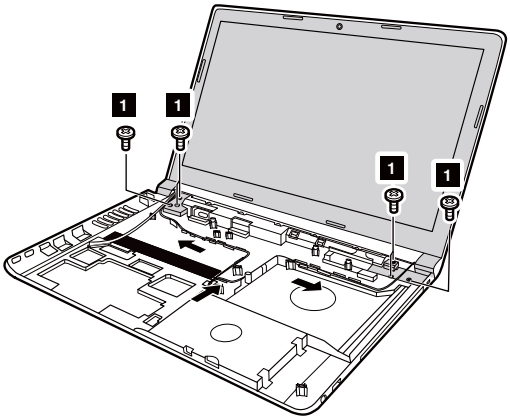

Step	Screw (quantity)	Color	Torque
1	M2.5 x 4 mm, flat-head, nylok-coated (6)	Black	2.0~2.5kgf.cm

Figure 16. Removal steps of LCD unit and base cover (continued)

Remove the LCD unit from the base cover in the direction by arrow **2**.

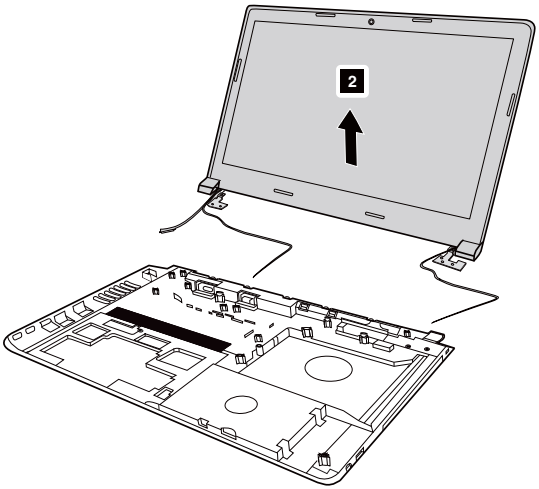

For Windows 7 operating System:

Note: Applying labels to the base cover

The new base cover FRU is shipped with a kit containing labels of several kinds. When you replace the base cover, you need to apply the following labels:

The following labels need to be peeled off from the old base cover, and put on the new base cover.

a Palm Rest Label
b ES label
c VGA label
d CPU label
e Win7 C-Sticker
f Rating label
g Rating print label
h WLAN & BT Label
i Indonesia rating label
j COA label

For some models, you also need to apply one or two FCC labels. Check the old base cover; if it has one or two FCC labels, find duplicates of them in the label kit and apply them to the new base cover.

For the location of each label, refer to the following figure:
B50-30/B50-30 Touch/B50-45/B50-70**:**

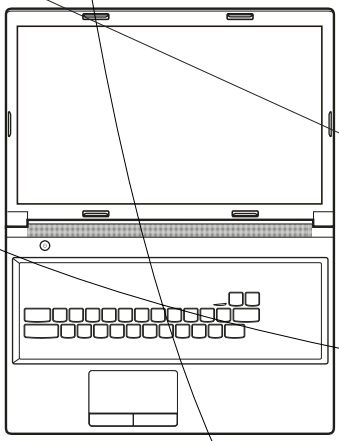

For Windows 8 operating System:

Note: Applying labels to the base cover

The new base cover FRU is shipped with a kit containing labels of several kinds. When you replace the base cover, you need to apply the following labels:

The following labels need to be peeled off from the old base cover, and put on the new base cover.

a Palm Rest Label
b ES label
c VGA label
d CPU label
e Rating label
f Rating print label
g WLAN & BT Label
h Indonesia rating label
h GML Label

For some models, you also need to apply one or two FCC labels. Check the old base cover; if it has one or two FCC labels, find duplicates of them in the label kit and apply them to the new base cover.

For the location of each label, refer to the following figure:

B50-30/B50-30 Touch/B50-45/B50-70**:**

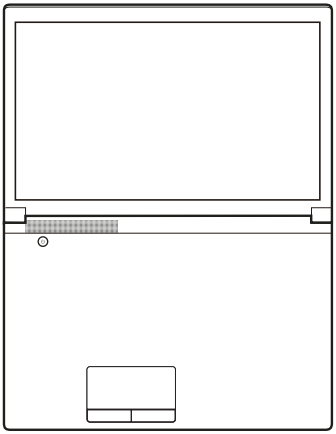

1170 LCD front bezel

For access, remove these FRUs:

- “1010 Battery pack” on page 33
- “1020 Optical drive” on page 34
- “1030 Bottom slot cover” on page 36
- “1040 Hard disk drive” on page 37
- “1050 DIMM” on page 39
- “1060 PCI Express Mini Card for wireless LAN/WAN” on page 40
- “1070 Keyboard” on page 41
- “1080 Keyboard bezel” on page 43
- “1110 Led board” on page 48
- “1130 System board” on page 50
- “1160 LCD unit and base cover” on page 55

Figure 17. Removal steps of LCD front bezel

Remove the LCD front bezel in the direction by arrow **1**.

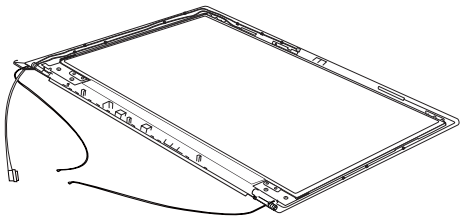

1180 LCD panel

For access, remove these FRUs in order:

- “1010 Battery pack” on page 33
- “1020 Optical drive” on page 34
- “1030 Bottom slot cover” on page 36
- “1040 Hard disk drive” on page 37
- “1050 DIMM” on page 39
- “1060 PCI Express Mini Card for wireless LAN/WAN” on page 40
- “1070 Keyboard” on page 41
- “1080 Keyboard bezel” on page 43
- “1110 Led board” on page 48
- “1130 System board” on page 50
- “1160 LCD unit and base cover” on page 55
- “1170 LCD front bezel” on page 59

Figure 18. Removal steps of LCD panel

Remove four screws **1**.

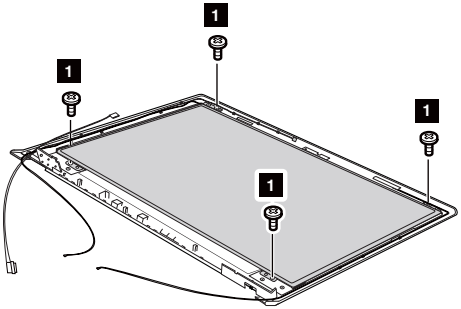

Step	Screw (quantity)	Color	Torque
1	M2 x 4 mm, flat-head, nylok-coated (4)	Black	1.5~2.0kgf.cm

Figure 18. Removal steps of LCD panel (continued)

Turn over the LCD module in the direction as shown by arrow **2**. Disconnect the connector by arrow **3** to remove the LCD panel in the direction by arrow **4**.

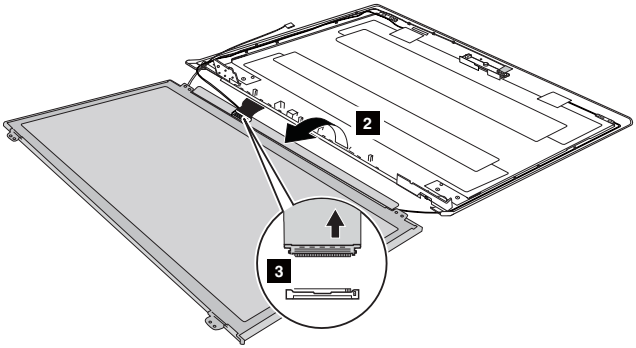

When installing: Make sure that the LCD panel connector is attached firmly.

1190 LCD hinges

For access, remove these FRUs:

- “1010 Battery pack” on page 33
- “1020 Optical drive” on page 34
- “1030 Bottom slot cover” on page 36
- “1040 Hard disk drive” on page 37
- “1050 DIMM” on page 39
- “1060 PCI Express Mini Card for wireless LAN/WAN” on page 40
- “1070 Keyboard” on page 41
- “1080 Keyboard bezel” on page 43
- “1110 Led board” on page 48
- “1130 System board” on page 50
- “1160 LCD unit and base cover” on page 55
- “1170 LCD front bezel” on page 59
- “1180 LCD panel” on page 60

Figure 19. Removal steps of hinges

Remove two screws 1 and six screws 2. Remove the hinges in the direction shown by arrow 3.

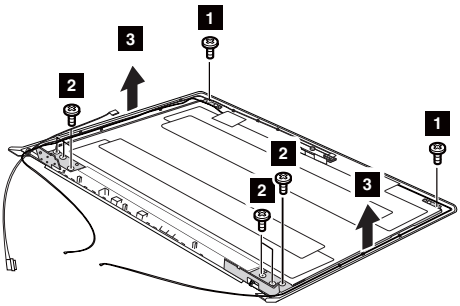

Step	Screw (quantity)	Color	Torque
1	M2 x 4 mm, flat-head, nylok-coated (2)	Black	1.5~2.0kgf.cm
2	M2.5 x 4 mm, flat-head, nylok-coated (6)	Black	2.0~2.5kgf.cm

1200 Antenna, LCD cable, and integrated camera

For access, remove these FRUs in order:

- “1010 Battery pack” on page 33
- “1020 Optical drive” on page 34
- “1030 Bottom slot cover” on page 36
- “1040 Hard disk drive” on page 37
- “1050 DIMM” on page 39
- “1060 PCI Express Mini Card for wireless LAN/WAN” on page 40
- “1070 Keyboard” on page 41
- “1080 Keyboard bezel” on page 43
- “1110 Led board” on page 48
- “1130 System board” on page 50
- “1160 LCD unit and base cover” on page 55
- “1170 LCD front bezel” on page 59
- “1180 LCD panel” on page 60
- “1190 LCD hinges” on page 62

Figure 20. Removal steps of Antenna, LCD cable, and integrated camera

Disconnect the camera connector in the direction shown by arrow **1**. Remove the camera from the LCD cover in the direction by arrow **2**.

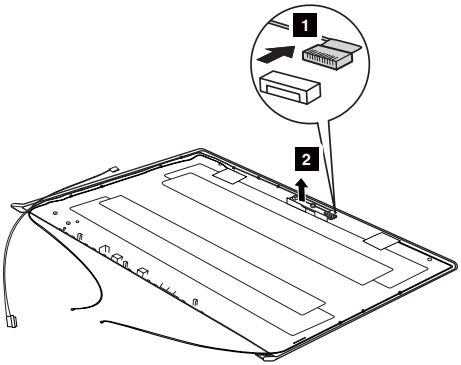

Figure 20. Removal steps of Antenna, LCD cable, and integrated camera

Release two antenna cables and one LCD cable from the cable guide. Detach the adhesive of the antenna to remove them in the direction by arrow **3**.

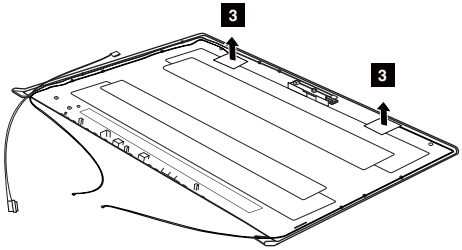

When installing:

- Route the antenna cables along the cable guides and secure the antenna boards with adhesive tapes. As you route the cables, make sure that they are not subjected to any tension. Tension can cause the cables to be damaged by the cable guides, or a wire to be broken.
- Make sure that the camera connector is attached firmly.

Locations

Front view

1. Integrated camera
2. Built-in microphone
3. Wireless antennas
4. Computer display
5. Speakers
6. Power button
7. Finger print
8. Touchpad
9. Memory card slot
10. System status indicator

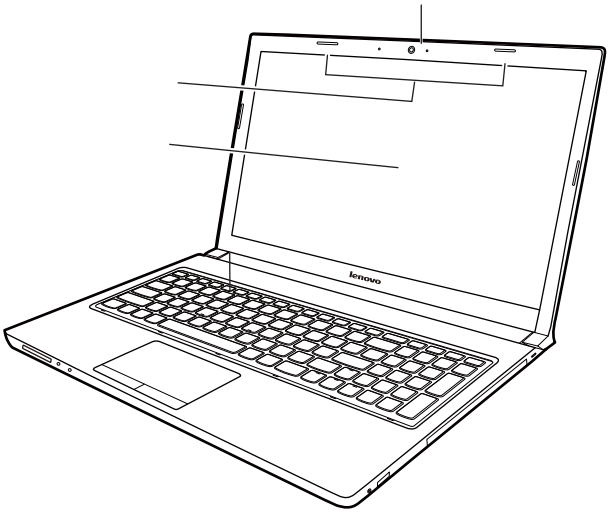

Right-side view

1. Combo audio jack
2. USB port
3. Novo button
4. Kingston lock slot
5. Optical drive

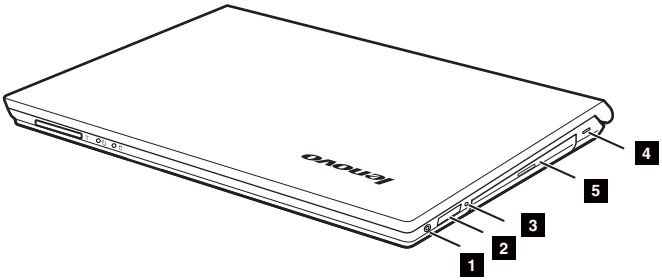

Bottom and left-side view

1. AC power adapter jack
2. Lenovo OneLink connector (on selected models)
3. Louvers
4. VGA port
5. RJ-45 port
6. HDMI port
7. USB port

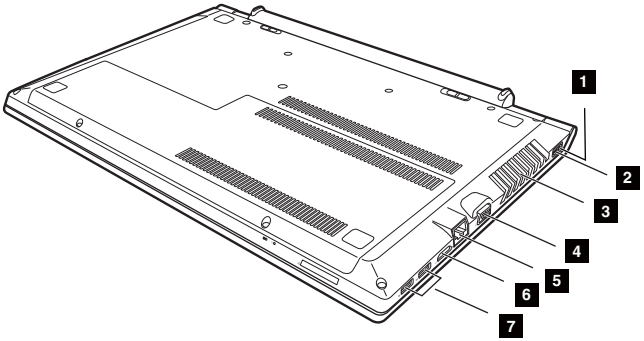

Parts list

This section presents the following service parts:

- “Overall” on page 69
- “LCD FRUs” on page 73
- “Keyboard” on page 75
- “Miscellaneous parts” on page 78
- “AC adapters” on page 79
- “Screws” on page 79
- “Power cords” on page 80

Notes:
Each FRU is available for all types or models, unless specific types or models are specified.

Overall

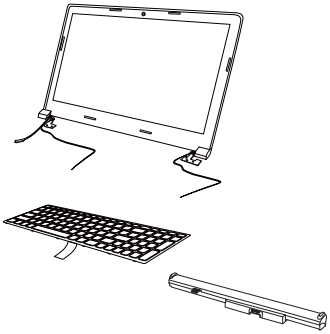

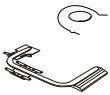

Table 5. Parts list—Overall

No.	FRU	FRU no.	CRU ID
1	LCD unit (see “LCD FRUs” on page 73)		
2	Keyboard (see “Keyboard” on page 75)		
3	Battery pack, 4cell, 14.4V 41Wh, SY L12S4E55	121500239	*
3	Battery pack, 4cell, 14.8V 41Wh, LG L12L4E55	121500241	*
3	Battery pack, 4cell, 14.88V 41Wh, SP/L L12M4E55	121500240	*
3	Battery pack, 4cell, 14.4V 32Wh, SY L13S4A01	121500242	*
3	Battery pack, 4cell, 14.4V 32Wh, LG L13L4A01	121500244	*
3	Battery pack, 4cell, 14.4V 32Wh, SP/L L13M4A01	121500243	*
4	ZIWB3 Power Board W/Cable	90007354	N
5	ZIWB3 Upper Case W/TP WO/FP	90205519	N
5	ZIWB3 Upper Case W/FP/TP	90205520	N
6	ZIWB2 Fingerprint Board Worldfair	90007268	N
7	ZIWB2 Fan	90205424	N
8	ZIWB3 Speaker W/Rubber L+R	90205528	N
9	ZIWB0 Heat Sink UMA	90205512	N
9	ZIWB1 Heat Sink DIS	90205551	N
9	ZIWB3 Heat Sink DIS	90205526	N
9	ZIWB3 Heat Sink UMA	90205527	N
9	C B50-45 DIS	5H40F86188	N
9	C B50-45 UMA	5H40F86210	N
10	ZIWB3 Battery Board	90007357	N
11	ZIWB3 LED Board W/Cable	90007353	N
12	ODD, 9.0mm Tray-in Rambo, HLDS GUA0N	25215010	*
12	ODD, 9.0mm Tray-in Rambo, PLDS DA-8A5SH	25213110	*
12	ODD, 9.0mm Tray-in Rambo, QSI UJ8FBS	25215312	*
12	ODD, 9.0mm Tray-in Rambo, TSST SU-228FB	25215832	*
13	ZIWB3 ODD Bezel	90205516	*
14	ZIWB3 ODD Board	90007355	N
15	ZIWB1 MB N15V 1G N2815 1000 W/FP	90007430	N
15	ZIWB1 MB W8P N15V 1G N2815 1000 W/FP	90007431	N
15	ZIWB1 MB W8S N15V 1G N2815 1000 W/FP	90007432	N
15	ZIWB1 MB UMA N2920 1000 WO/FP	90007433	N
15	ZIWB1 MB W8P UMA N2920 1000 WO/FP	90007434	N
15	ZIWB1 MB W8S UMA N2920 1000 WO/FP	90007435	N
15	ZIWB1 MB UMA N3520 1000 WO/FP	90007436	N
15	ZIWB1 MB W8P UMA N3520 1000 WO/FP	90007437	N
15	ZIWB1 MB W8S UMA N3520 1000 WO/FP	90007438	N
15	ZIWB3 MB Jet-LE 2G I7-4500U 1000 W/FP	90007358	N
15	ZIWB3 MB W8P Jet-LE2G I7-4500U 1000 W/FP	90007359	N
15	ZIWB3 MB W8S Jet-LE2G I7-4500U 1000 W/FP	90007360	N
15	ZIWB3 MB Jet-LE 2G I5-4200U 1000 W/FP	90007361	N
15	ZIWB3 MB W8P Jet-LE2G I5-4200U 1000 W/FP	90007362	N
15	ZIWB3 MB W8S Jet-LE2G I5-4200U 1000 W/FP	90007363	N
15	ZIWB3 MB I5-4200U UMA 1000 WO/FP	90007364	N
15	ZIWB3 MB W8P I5-4200U UMA 1000 WO/FP	90007365	N

No.	FRU	FRU no.	CRU ID
15	ZIWB3 MB W8S I5-4200U UMA 1000 WO/FP	90007366	N
15	ZIWB3 MB Jet-LE 2G I3-4100U 1000 W/FP	90007367	N
15	ZIWB3 MB W8P Jet-LE2G I3-4100U 1000 W/FP	90007368	N
15	ZIWB3 MB W8S Jet-LE2G I3-4100U 1000 W/FP	90007369	N
15	ZIWB3 MB Jet-LE 2G I3-4010U 1000 W/FP	90007370	N
15	ZIWB3 MB W8P Jet-LE2G I3-4010U 1000 W/FP	90007371	N
15	ZIWB3 MB W8S Jet-LE2G I3-4010U 1000 W/FP	90007372	N
15	ZIWB3 MB I3-4005U UMA 1000 WO/FP	90007373	N
15	ZIWB3 MB W8P I3-4005U UMA 1000 WO/FP	90007374	N
15	ZIWB3 MB W8S I3-4005U UMA 1000 WO/FP	90007375	N
15	C B50-45 A6-6310 2G 1000 W/FP	5B20F86207	N
15	C B50-45W8P A6-6310 2G 1000W/FP	5B20F86208	N
15	C B50-45W8S A6-6310 2G 1000W/FP	5B20F86204	N
15	C B50-45 UMA A6-6310 1000 W/FP	5B20F86202	N
15	C B50-45W8PUMA A6-6310 1000W/FP	5B20F86200	N
15	C B50-45W8SUMA A6-6310 1000W/FP	5B20F86198	N
15	C B50-45 E1-6010 2G 1000 W/FP	5B20F86197	N
15	C B50-45W8P E1-6010 2G 1000W/FP	5B20F86195	N
15	C B50-45W8S E1-6010 2G 1000W/FP	5B20F86193	N
15	C B50-45 UMA E1-6010 1000 W/FP	5B20F86192	N
15	C B50-45W8PUMA E1-6010 1000W/FP	5B20F86191	N
15	C B50-45W8SUMA E1-6010 1000W/FP	5B20F86196	N
15	C B50-45 A4-6210 2G 1000 W/FP	5B20F86194	N
15	C B50-45W8P A4-6210 2G 1000W/FP	5B20F86212	N
15	C B50-45W8S A4-6210 2G 1000W/FP	5B20F86211	N
15	C B50-45 UMA A4-6210 1000 W/FP	5B20F86209	N
15	C B50-45W8PUMA A4-6210 1000W/FP	5B20F86205	N
15	C B50-45W8SUMA A4-6210 1000W/FP	5B20F86206	N
15	C B50-45 E2-6110 2G 1000 W/FP	5B20F86203	N
15	C B50-45W8P E2-6110 2G 1000W/FP	5B20F86201	N
15	C B50-45W8S E2-6110 2G 1000W/FP	5B20F86199	N
15	C B50-45 UMA E2-6110 1000 W/FP	5B20F86189	N
15	C B50-45W8PUMA E2-6110 1000W/FP	5B20F86213	N
15	C B50-45W8SUMA E2-6110 1000W/FP	5B20F86190	N
16	ZIWB3 Lower Case W/DC-IN Hole	90205530	N
16	ZIWB1 Lower Case W/DC IN HoleWO/Fan Hole	90205552	N
16	ZIWB3 Lower Case W/Docking Hole	90205529	N
17	Memory, M471B5674QH0-YK0 2GB DDR3L 1600	11202451	*
17	Memory, HMT425S6AFR6A-PB 2GB DDR3L 1600	11201299	*
17	Memory, RMT3170MK58F8F-1600 2GB DDR3L 1600	11202301	*
17	Memory, MT4KTF25664HZ-1G6E1 2GB DDR3L	11201967	*
17	Memory, HMT451S6AFR8A-PB 4GB DDR3L 1600	11201300	*
17	Memory, M471B5173DB0-YK0 4GB DDR3L 1600	11202081	*
17	Memory, HMT451S6BFR8A-PB 4GB DDR3L 1600	11202706	*
17	Memory, RMT3170ME68F9F-1600 4GB DDR3L 1600	11202302	*
17	Memory, MT8KTF51264HZ-1G6E1 4GB DDR3L 1600	11202125	*

No.	FRU	FRU no.	CRU ID
17	Memory, HMT41GS6AFR8A-PB 8GB DDR3L 1600	11201301	*
17	Memory, M471B1G73DB0-YK0 8GB DDR3L 1600	11202082	*
17	Memory, HMT41GS6BFR8A-PB 8GB DDR3L 1600	11202707	*
17	Memory, RMT3160ME68FAF-1600 8GB DDR3L 1600	11202450	*
17	Memory, MT16KTF1G64HZ-1G6E1 8GB DDR3L 1600	11201304	*
18	WLAN, Intel 3160 1x1AC+BT PCIE NGFF WLAN	20200418	**
18	WLAN, Cbt BCM43162 1x1AC+BT4.0 PCIE M.2 WLAN	20200573	**
18	WLAN, Ltn NFA345 1x1AC+BT4.0 PCIE M.2 WLAN	20200579	**
18	WLAN, Cbt BCM43142 1x1BN+BT4.0 PCIE M.2 WLAN	20200557	**
18	WLAN, Ltn NFA335 1x1BN+BT4.0 PCIE M.2 WLAN	20200558	**
18	WLAN, Cbt RTL8723BE 1x1BN+BT4.0 PCIE M.2 WLAN	20200570	**
18	WLAN, Intel 7260 2x2AC+BT PCIE M.2 WLAN V2	20200552	**
18	WLAN, Intel 7265 2x2AC+BT PCIE M.2 WLAN	20200609	**
18	WLAN, Cbt BCM4352 2x2AC+BT4.0 PCIE M.2 WLAN	20200480	**
18	WLAN, Ltn NFA344 2x2AC+BT4.0 PCIE M.2 WLAN	20200580	**
19	ZIWB2 IO Board	90007250	N
20	HDD, ST320LT012 6G 7mm 5.4K 320G	16200384	**
20	HDD, WD3200LPCX-24C6HT0 6G 7mm 5.4K 320G	16200551	**
20	HDD, HTS545032A7E660 6G 7mm 5.4K 320G HDD	16200405	**
20	HDD, TSB MQ01ABF032 6G 7mm 5.4K 320G	16200434	**
20	HDD, ST500LT012 6G 7mm 5.4K 500G	16200383	**
20	HDD, WD5000LPCX-24C6HT0 6G 7mm 5.4K 500G	16200395	**
20	HDD, HTS545050A7E660 6G 7mm 5.4K 500G	16200404	**
20	HDD, TSB MQ01ABF050 6G 7mm 5.4K 500G	16200433	**
20	HDD, ST500LM012 6G 9.5mm 5.4K 500G	16200387	**
20	HDD, ST1000LM024 6G 9.5mm 5.4K 1T	16200385	**
20	HDD, WD10JPCX-24UE4T0 6G 9.5mm 5.4K 1T	16200393	**
20	HDD, TSB MQ01ABD100 6G 9.5mm 5.4K 1T	16200429	**
20	HDD, HTS541010A9E680 6G 9.5mm 5.4K 1T	16200400	**
20	HDD, ST500LM000 6G 7mm 500G+8G SSHD	16200391	**
20	HDD, ST1000LM014 9.5mm 1T+8G? 5400rpm	16200389	**
21	ZIWB3 Thermal Door 95H	90205514	N
21	ZIWB3 Thermal Door 70H	90205515	N
22	ZIWB3 Docking Board	90007356	N

LCD FRUs

In Lenovo B50-30/B50-30 Touch/B50-45/B50-70, the type of LCD is 15.6-inch high definition (HD).

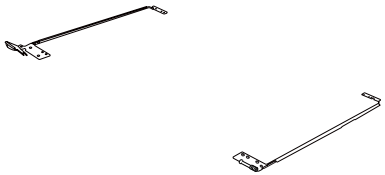

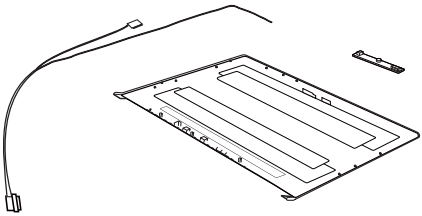

Table 6. Parts list—15.6-in. HD TFT

No.	FRU	FRU no.	CRU ID
1	ZIWB3 LCD BezelW/CameraHole/Magnet/Mylar	90205535	N
1	ZIWB3 LCDBezelWO/CameraHole/Magnet/Mylar	90205536	N
1	ZIWB1 LCD Bezel W/Magnet TS	90205553	N
2	ZIWB1 LCD Module 3.8H HD TS	90400300	N
2	ZIWB1 LCD Module 3.2H FHD TS	90400301	N
3	ZIWB3 Hinge L+R NT	90205531	N
3	ZIWB1 Hinge L+R TS	90205554	N
4	ZIWB1 Antenna Main+AUX TS	90205555	N
4	ZIWB3 Antenna Main+AUX NT	90205532	N
5	ZIWB2 Camera Board 1M W/Mylar TS	90007315	N
5	ZIWB2 Camera Board 0.3M W/Mylar TS	90007316	N
5	ZIWB2 Camera Board 1M NT	90007266	N
5	ZIWB2 Camera Board 0.3M NT	90007267	N
6	ZIWB3 LCD Cable WO/Camera Cable NT	90205533	N
6	ZIWB3 LCD Cable W/Camera Cable NT	90205533	N
6	ZIWB1 LCD Cable W/Camera Cable TS	90205556	N
7	ZIWB3 LCD Cover NT	90205537	N
7	ZIWB1 LCD Cover TS	90205557	N

Keyboard

Table 7. Parts list—Keyboard

Language		P/N	CRU ID
Dafon	English	25214785	**
	U.K. English	25214786	
	Italian	25214787	
	Spanish	25214788	
	Turkish	25214789	
	Thailand	25214790	
	Portugue	25214791	
	Latin	25214792	
	Canada English &French	25214793	
	Korean	25214794	
	Tradational Chinese	25214795	
	Russian	25214796	
	French	25214797	
	German	25214798	
	Arabic	25214799	
	Brazilian	25214800	
	Japanese	25214801	
	Dutch	25214802	
	Greek	25214803	
	Hebrew	25214804	
	Hungarian	25214805	
	Nordic	25214806	
	Belgian	25214807	
	Iceland	25214808	
	Slovenian	25214809	
	Swiss	25214810	
	International English	25214811	
	Czechoslovakian	25214812	
	Bulgarian	25214813	
	India	25214814	

Table 7. Parts list—Keyboard (continued)

Language		P/N	CRU ID
Sunrex	English	25214755	**
	U.K. English	25214756	
	Italian	25214757	
	Spanish	25214758	
	Turkish	25214759	
	Thailand	25214760	
	Portugue	25214761	
	Latin	25214762	
	Canada English &French	25214763	
	Korean	25214764	
	Tradational Chinese	25214765	
	Russian	25214766	
	French	25214767	
	German	25214768	
	Arabic	25214769	
	Brazilian	25214770	
	Japanese	25214771	
	Dutch	25214772	
	Greek	25214773	
	Hebrew	25214774	
	Hungarian	25214775	
	Nordic	25214776	
	Belgian	25214777	
	Iceland	25214778	
	Slovenian	25214779	
	Swiss	25214780	
	International English	25214781	
	Czechoslovakian	25214782	
	Bulgarian	25214783	
	India	25214784	

Table 7. Parts list—Keyboard (continued)

Language		P/N	CRU ID
Chicony	English	25214725	**
	U.K. English	25214726	
	Italian	25214727	
	Spanish	25214728	
	Turkish	25214729	
	Thailand	25214730	
	Portugue	25214731	
	Latin	25214732	
	Canada English &French	25214733	
	Korean	25214734	
	Tradational Chinese	25214735	
	Russian	25214736	
	French	25214737	
	German	25214738	
	Arabic	25214739	
	Brazilian	25214740	
	Dutch	25214742	
	Greek	25214743	
	Hebrew	25214744	
	Hungarian	25214745	
	Nordic	25214746	
	Belgian	25214747	
	Iceland	25214748	
	Slovenian	25214749	
	Swiss	25214750	
	International English	25214751	
	Czechoslovakian	25214752	
	Bulgarian	25214753	
	India	25214754	

Miscellaneous parts

Table 8. Parts list—Miscellaneous parts

No.	FRU	FRU no.	CRU ID
(a)	ZIWB2 ODD Bracket	90205409	N
(b)	ZIWB2 HDD Bracket	90205411	N
(c)	ZIWB2 FP Bracket	90205428	N
(d)	ZIWB3 TP Cable	90205518	N
(e)	ZIWB3 DC-IN Cable UMA	90205524	N
(e)	ZIWB3 DC-IN Cable DIS	90205525	N
(f)	ZIWB3 FP Board Cable	90205517	N
(g)	ZIWB3 IO Board Cable	90205521	N
(h)	ZIWB3 Docking Cable DIS	90205522	N
(h)	ZIWB3 Docking Cable UMA	90205549	N
(i)	ZIWB3 Docking DC-IN Cable DIS	90205550	N
(i)	ZIWB3 Docking DC-IN Cable UMA	90205523	N

AC adapters

Table 9. Parts list—3-pin AC adapters

FRU	P/N	CRU ID
Delta ADLX45NDC3A 20V 2.25A adapter	36200602	*
Lieton ADLX45NLC3A 20V 2.25A adapter	36200606	*
Chicony ADLX45NCC3A 20V 2.25A	36200610	*
Delta ADP-65FD BB	36200249	*
Lieton ADLX65NLC3A 20V 3.25A adapter	36200607	*
Chicony ADLX65NCC3A 20V 3.25A adapter	36200611	*

Screws

Table 10. Screw list

FRU	P/N	CRU ID
ZIWB2 Screw Hinge-LCD/ODDBRK-ODD	90205437	N
ZIWB2 Screw Lower-KB	90205438	N
ZIWB2 Screw Fan-MB/FAN-Lower	90205439	N
ZIWB2 Screw HingeBRK-LCD Cover	90205440	N
ZIWB2 Screw HingeBRK-LCD Bezel	90205441	N
ZIWB2 Screw HDDBRK-HDD	90205442	N
ZIWB2 Screw IO Board-Lower/MB-Lower	90205443	N
ZIWB2 Screw Hinge BRK-LCD Cover	90205502	N

Power cords

A Lenovo power cord for a specific country or region is usually available only in that country or region:

Table 11. Parts list—3-pin power cords

Region	P/N	CRU ID
Brazil • LINETEK LS15 H03VV-F LP26A 1m	145-000596	*
Brazil • Longwell LP-46+H03VV-F+LS-18 1m	145-000554	21Tf.336204TD(5)8.6(00
Brazil • VOLEX CH10S3+H03VV-F+VAC5S 1m	145-000527	
Brazil • [illegible]	145-000011	
Israel • LINETEK LS15 H03VV-F LP26A 1m	145-000595	
Israel •	[illegible]TcTEMC/Span*MCID360TD0231Tj/TT21Tf.250Tn*MCI5116.5	

Region	P/N	CRU ID
US • LINETEK LP-30B + SPT-2 + LS15 1m	145-000594	*
US • Longwell LP-30B+SPT-2 18AWG+LS-18 1m	145-000562	
US • Volex US15S3+SPT-2 +VAC5S 1m	145-000537	
US • lux 0014+SPT-2 60 18/3C+0016 1m	145-500002	
China • LINETEK PC323+RVV300/300+LS15 1m	145-000600	
China • Longwell LSG-31+RVV300/300+LS-18 1m	145-000568	
China • VOLEX GB10S3+RVV 300/500+VAC5S 1m	145-000538	
China • lux 0036+RVV 300/300 0.75/3C+0002 1m	145-500003	
India • LINETEK PE-361+ H05VV-F+ LS15 1m	145-000592	
India • Longwell LP-67+BIS+LS-18 1m	145-000560	
India • lux 0046+IS694 0.75/3C+0011 1m	145-500004	
Japan • LINETEK LS15+VCTF+LP-54 1m	145-000587	
Japan • Longwell LP-54+VCTF+LS-18 1m	145-000555	
Japan • VOLEX VAC5S+VCTF+M755 1m	145-000530	
Japan • lux 0018(E)+VCTF 0.75/3C+0021 1m	145-500005	
Australia • LINETEK LS15+H03VV-F+LP-23A 1m	145-000589	
Australia • Longwell LP-23A+LFC-3R+LS-18 1m	145-000557	
Australia • VOLEX AU10S3+H03VV-F+VAC5S 1m	145-000532	
Australia • lux 0038+H03VV-F 0.75/3C+0011 1m	145-500006	
Taiwan • LINETEK LS15+VCTF+LP-53 1m	145-000588	
Taiwan • Longwell LP-71+VCTF+LS-33 1m	145-000556	
Taiwan • VOLEX TW15CS3+VCTF+VAC5S 1m	145-000531	
Taiwan • lux 0019+VCTF 0.75/3C+0021 1m	145-500007	

Region	P/N	CRU ID
Korea • LINETEK LS15+H05VV-F+LP-E04A 1m	145-000590	*
Korea • Longwell LP-486+KTLH03VV-F+LS-5 1m	145-000558	
Korea • VOLEX M2511+KETI IEC+VAC5S 1m	145-000533	
Korea • lux 0033+H03VV-F 0.75/3C+0011 1m	145-500008	
Italy • LINETEK LS15+H03VV-F+PE-336 1m	145-000591	
Italy • Longwell LP-22+H03VV-F+LS-18 1m	145-000559	
Italy • VOLEX IT10S3+HO3VV-F+VAC5S 1m	145-000535	
Italy • lux 0029+H03VV-F 0.75/3C+0011 1m	145-500009	
South Africa • LINETEK LS15+H03VV-F+PE-364 1m	145-000586	
South Africa • Longwell LP-39+H03VV-F+LS-18 1m	145-000554	
South Africa • lux 0044+H03VV-F 0.75/3C+0011 1m	145-500010	
Danmark • LINETEK LS15+H03VV-F+LP-38 1m	145-000598	
Danmark • Longwell LP-40+H03VV-F+LS-18 1m	145-000566	
Danmark • VOLEX MP233D+H03VV-F+VAC5S 1m	145-000534	
Danmark • lux 0048+H03VV-F 0.75/3C+0011 1m	145-500014	
Argentina • LINETEK LS15+H03VV-F+LP39 1m	145-000599	
Argentina • Longwell LP-24+H03VV-F+LS-18 1m	145-000567	
Argentina • VOLEX VA2073+H03VV-F+VAC5S 1m	145-000528	
Argentina • lux 0040+H03VV-F 0.75/3C+0011 1m	145-500015	

Notices

Lenovo may not offer the products, services, or features discussed in this document in all countries. Consult your local Lenovo representative for information on the products and services currently available in your area. Any reference to a Lenovo product, program, or service is not intended to state or imply that only that Lenovo product, program, or service may be used. Any functionally equivalent product, program, or service that does not infringe any Lenovo intellectual property right may be used instead. However, it is the user's responsibility to evaluate and verify the operation of any other product, program, or service.

Lenovo may have patents or pending patent applications covering subject matter described in this document. The furnishing of this document does not give you any license to these patents.

LENOVO GROUP LTD. PROVIDES THIS PUBLICATION "AS IS" WITHOUT WARRANTY OF ANY KIND, EITHER EXPRESS OR IMPLIED, INCLUDING, BUT NOT LIMITED TO, THE IMPLIED WARRANTIES OF NON-INFRINGEMENT, MERCHANTABILITY OR FITNESS FOR A PARTICULAR PURPOSE. Some jurisdictions do not allow disclaimer of express or implied warranties in certain transactions, therefore, this statement may not apply to you.

This information could include technical inaccuracies or typographical errors. Changes are periodically made to the information herein; these changes will be incorporated in new editions of the publication. Lenovo may make improvements and/or changes in the product(s) and/or the program(s) described in this publication at any time without notice.

The products described in this document are not intended for use in implantation or other life support applications where malfunction may result in injury or death to persons. The information contained in this document does not affect or change Lenovo product specifications or warranties. Nothing in this document shall operate as an express or implied license or indemnity under the intellectual property rights of Lenovo or third parties. All information contained in this document was obtained in specific environments and is presented as an illustration. The result obtained in other operating environments may vary.

Lenovo may use or distribute any of the information you supply in any way it believes appropriate without incurring any obligation to you.

Any references in this publication to non-Lenovo Web sites are provided for convenience only and do not in any manner serve as an endorsement of those Web sites. The materials at those Web sites are not part of the materials for this Lenovo product, and use of those Web sites is at your own risk.

Any performance data contained herein was determined in a controlled environment. Therefore, the result obtained in other operating environments may vary significantly. Some measurements may have been made on development-level systems and there is no guarantee that these measurements will be the same on generally available systems. Furthermore, some measurements may have been estimated through extrapolation. Actual results may vary. Users of this document should verify the applicable data for their specific environment.

Trademarks

The following terms are either registered trademarks or trademarks of Lenovo in the United States and/or other countries:

Lenovo®
Lenovo logo®
IdeaPad®
VeriFace®
OneKey Rescue® (OneKey Recovery, OneKey Antivirus)
APS®
Power Express®
Energy Management and ReadyComm®

The following terms are trademarks of Microsoft Corporation in the United States, other countries, or both:

Windows®
Windows® 7
Windows® 8

The following are trademarks of Intel Corporation or its subsidiaries in the United States, other countries, or both:

Intel®
Intel®Core™ 2 Duo

The following is a trademark of Advanced Micro Devices, Inc.

AMD®

Other company, product, or service names may be the trademarks or service marks of others.